# Railway Age Gazette

**Including the Railroad Gazette and the Railway Age**

PUBLISHED EVERY FRIDAY AND DAILY EIGHT TIMES IN JUNE, BY THE
SIMMONS-BOARDMAN PUBLISHING COMPANY,
83 FULTON STREET, NEW YORK.

CHICAGO: Transportation Bldg. CLEVELAND: Citizens' Bldg.
LONDON: Queen Anne's Chambers, Westminster.

E. A. SIMMONS, *President.*
L. B. SHERMAN, *Vice-President.* HENRY LEE, *Sec'y & Treas.*
The address of the company is the address of the officers.

EDITORS.
SAMUEL O. DUNN, *Editor.*

ROY V. WRIGHT, *Managing Editor.*
W. E. HOOPER
B. B. ADAMS
E. T. HOWSON
H. H. SIMMONS
H. F. LANE
R. E. THAYER
A. C. LOUDON
E. S. FAUST
F. W. KRAEGER
A. D. CLOUD
GEORGE L. FOWLER
WILLIAM FORSYTH
S. W. DUNNING

Subscriptions, including 52 regular weekly issues and special daily editions published from time to time in New York, or in places other than New York, payable in advance and postage free:

United States and Mexico.....$5.00
Canada ..... 6.00
Foreign Countries (excepting daily editions)..... 8.00
Single Copies .....15 cents each

Engineering and Maintenance of Way Edition and four Maintenance of Way Convention Daily issues, North America, $1.00; foreign, $2.00.

Entered at the Post Office at New York, N. Y., as mail matter of the second class.

**WE GUARANTEE, that of this issue 10,225 copies were printed; that of those 10,225 copies, 8,771 were mailed to regular subscribers and 348 were provided for counter and news companies' sales; that the total copies printed this year to date were 34,626 copies—an average of 8,657 copies a week.**

VOLUME 54. JANUARY 24, 1913. NUMBER 4.


## CONTENTS


EDITORIAL:
Editorial Notes ..... 133
Soft Answers to Hard Questions..... 134
Report of the Federal Boiler Inspector..... 135

LETTERS TO THE EDITOR:
Government Operation of Railroads, 136; Sales of International Signal Stock, 136; Contingent Schedules on the Virginian, 137.

MISCELLANEOUS:
Canada's Most Successful Railway Year; by J. L. Payne..... 138
*A Firing-Up House for Repaired Locomotives..... 141
*A Collapsible Platform and Vestibule..... 142
Train Accidents in December ..... 144
Freight Car Tactics or Regulations; by Arthur Hale..... 145
Weighing Methods on the St. Louis & San Francisco..... 147
Postal Car Lighting ..... 149
Annual Report of the New York Public Service Commission, Second District ..... 150
Foreign Railway Notes .....141, 150

**MAINTENANCE OF WAY SECTION.**

EDITORIAL:
Editorial Notes ..... 151
The Use of Slow Orders and Flags..... 152

LETTERS TO THE EDITOR:
Light Versus Heavy Treatment of Timber..... 153

MISCELLANEOUS:
*Notes on Staking Out Track Connections; by W. H. Wilms..... 154
Erie Annual Track Inspection..... 157
Annual Track Inspection of the New York Central..... 157
Abstract of Engineering Articles Since December 20, 1912..... 157
New Delaware, Lackawanna & Western Specifications for Portland Cement ..... 158
*The Storing and Handling of Material ..... 159
Southern Pacific's Manufacture of Track Fastenings..... 161
*Handling Track Material on the Pittsburgh & Lake Erie..... 162
The Appearance of Track; by George J. Sharkey..... 163
*A Blow Torch for Cleaning Snow and Ice from Switches..... 163
American Wood Preservers' Convention ..... 164

GENERAL NEWS SECTION..... 176


*Illustrated.

FOR many years the railways adjusted their passenger rates to accord with varying conditions of transportation. Then many of the state legislatures reduced the prevailing rate from three to two cents a mile, frequently explaining such action on the ground that a single flat rate is preferable to "discriminating" rates. Since that time the railways naturally have refrained from making many new rates less than two cents a mile, but suburban commutation fares to and from large cities have been retained in most cases at the old figures, the density of such traffic of course justifying a lower rate than the average. On January 1 the Illinois Central advanced its suburban fares in Chicago for single-ride tickets to the two-cent-a-mile basis prescribed by the state legislature, without disturbing the low commutation rates for 10-ride and 25-ride and monthly tickets, which are used by all regular patrons of the suburban service, for the purpose of inducing a larger sale of the commutation tickets, and thereby reducing congestion at its ticket windows. The advance does not affect those who are dependent upon the road for their daily transportation to and from their work, and who make up the bulk of the traffic, but falls upon the occasional passenger for whom nearly empty trains are run throughout the day. In this case the usual complaint of the suburbanite has been magnified by several local business men's associations, and aldermen up for re-election, into charges such as that the advance is a menace to the real estate business and that it is discrimination against the territory served by the Illinois Central, and especially against those who cannot afford to buy ten rides all at once. Therefore, the corporation counsel has submitted an opinion that the city council has the power to regulate the suburban fares of steam roads within the city limits, and the local transportation committee has appointed a committee to investigate the entire subject of suburban rates with a view to reducing them by ordinance. Railway regulation by a federal government and at the same time by the various state governments is sufficiently complicated now. To add regulation of rates by city councils would seem to be an entirely unnecessary complication.

THE collision at Irvington (Indianapolis), Ind., November 13, caused the death of eleven passengers and four employees, and on account of it officers and directors, as well as trainmen, were indicted on criminal charges and are now under bonds. The salient facts of this case are already well known; but the report of Chief Inspector H. W. Belnap, of the Interstate Commerce Commission, dated December 31, and made public this week, is an illuminating rehearsal of important collateral facts which are of particular interest. The disaster affords one more striking illustration of the acts or omissions of a half dozen men converging on a single point and causing a disaster which any one of the half dozen, if he had done his best to make things safe, would have prevented. The names of the men on the train are given in the report, but the derelictions or mistakes of officers, though shown, are not connected with any particular person. We note the main elements of the cause of the collision in the order in which they are given by Mr. Belnap: *(1) The manual block system is in use, but for the protection only of following movements. (2) The freight (eastbound) had been delayed about an hour by being stalled on a grade of 1 per cent. It had to double a short hill. (3) The engineman of the freight on backing into the side track sounded the whistle to call in the head brakeman and had the fireman cover the headlight, before the switch had been set straight. (4) The engineman got down on the ground and started to close the switch himself, but before he got to it he met Brakeman Gross (who had been east to protect the train) coming in, and Gross, on being asked, said that the switch was closed. The rear brakeman, having been sent by the conductor, came up just then, asked the same question and received the same answer. The conductor had gone back to the station some 2,000 ft. back of the engine. (5) The switch had not been closed and its light was not burning. (6) Gross

*Mr. Belnap's closing paragraphs, embracing his conclusions, are given in another column.

said that as he was coming in he "saw a light near the switch and supposed some one was closing it"; the headlight being covered he assumed that everything was all right. He walked around the switchstand, but did not observe it carefully nor look at the rails. He was carrying a red and a white lantern and the light was not very good. (7) The passenger engine was working steam when it entered the side track. (8) The switch lamp was designed to burn 8 days (192 hours) and was usually attended to twice a week. It was burning at 5 p. m., 10 hours before the collision; but in that 10 hours three trains had reported it not burning. It had plenty of oil. (9) The rule (104A) puts on the engineman the duty of seeing that the switch is set straight in a case like this. (10) The conductor and both brakemen had had occasion to turn this switch, but none of them lighted it. (11) The rule requiring an imperfect fixed signal to be taken as a stop signal specifically includes switches among fixed signals; but the superintendent of the division said that the rule had not been "interpreted" to cover switch lights, and trains were not expected to stop because of the absence of such a light. Therefore, says Mr. Belnap, the engineman of the passenger train was following the customary practice. (12) Failures of switch lights are frequent. (13) Sixteen trains had had to double this hill in two months; coal was reported poor. (14) The engineman had just been promoted and had made only six trips as a runner. (15) The head brakeman (Gross) had been in the service only 19 days; he had had two months' experience elsewhere as switchman (yard brakeman). (16) The fireman was making his first trip over the road but had had 11 months' experience elsewhere. The engineman had been helping in the care of the fire. (17) The city of Indianapolis imposes a speed limit of 30 miles an hour, but this limit is not observed at this place. (18) The passenger engine had had an electric headlight, but it had been off two months for repairs.—As we have said above, this is an illustrative case, of a striking character. Railroad officers will need no assistance in drawing the moral.

---

At the meeting of the New York Railroad Club, held on the evening of January 17, a paper was presented advocating the use of an electrically controlled air brake for steam railway service. While, both in the paper and the discussion which followed, special emphasis was placed on the greater rapidity of application that can be obtained at the rear of a long train, by means of such a control, the advantages to be gained were not considered to be those of decreasing the distance run in making the stop, but in the reduction of the shock incident to the present method of brake application, because of the greater uniformity in the retardation of all of the cars of the train. Even at high speeds the percentage of reduction, in stopping distances, would not be great in an emergency application; but it is in service work that the advantages will be the most pronounced, because under present conditions the difference in time of brake application on the front and rear cars increases with the length of the train. The first advantage to be gained would, therefore, lie in the elimination of rough stops. Then, as shocks are decreased, so would be the tendency of the wheels to slide flat. The discussion was directed more particularly to passenger train work, and the subject was reviewed from the operating and mechanical points of view; the application of the electrically controlled brakes to the cars of the subway and Westchester lines was elaborated on especially in the case of the latter, where 200 per cent. braking pressures are used. And finally the use of such a brake on freight trains was advocated on the ground that there would be a great reduction in shock, and consequently in damage to cars and lading, if the time of application of brakes to the last car of a 100-car train were to be cut down to a simultaneous application to all of the cars from the present required time of 6 or 7 seconds. While no instances were cited of the application of this electric control to steam railway work, it was evident, from the attitude of all who took part in the discussion, that the improvement would be welcomed as a means of obviating some of the present annoyances incident to the use of the air brake.

---

## SOFT ANSWERS TO HARD QUESTIONS.

"A SOFT answer turneth away wrath." This is the title or the main theme of a circular issued by a western road and recently quoted in the newspapers, calling on trainmen and other employees to more carefully heed the rule requiring them to be uniformly courteous in their intercourse with passengers. With the noticeable accession of religion in railroad circles which seems to have taken place lately, this and other quotations from holy writ are increasingly popular. This, no doubt, is a good thing; for it is always salutary to go back frequently to the fundamentals, and the Bible is a good place in which to find rock-bottom truth.

But only a little observation is necessary to remind the superintendent (if he has overlooked the fact) that the passenger brakeman—the man whom we always have in mind when we talk about courtesy to passengers—has a very difficult task, and that mere softness will not enable him to get very far in his efforts to give wholly satisfactory service. In other words, a hundred—or even 20—passengers will in the course of a day ask him a variety of perplexing questions which a college education would not enable him to answer rightly; and if he is going to make a success of carrying out the superintendent's ideal he has got to engage in a perpetual study. It is the fashion nowadays to tell the station agent that he is the representative of the company in all things; and so far as courteous attention to passengers is concerned the brakeman is as much so as the agent; and both of them do, indeed, encounter people all the time whose simple questions about trains or fares or facilities are supplemented by criticisms, expressed or clearly implied, which impugn the general policy of the company as incisively and as comprehensively as anything ever published in Washington by Lawyer Brandeis or any other hired critic seeking to incriminate a whole board of directors.

In short, the brakeman has to frame answers which the general manager himself can frame with only partial success, and has need for a diplomatic mind like that of the secretary of state. He needs to consult not only Proverbs 15:1 but to bear in mind that the superintendent, if he had thought so far, would have quoted also 15:2—"The tongue of the wise uttereth knowledge aright." The company expects every employee to be not only gentle, but wise. A trainman—or even a conductor who gets $200 a month—may speak very amiably, yet leave passengers unsatisfied because of his lack of knowledge; knowledge of simple facts which he might have acquired by a little study. A passenger is not entitled to be informed about branch line or stage line connections a thousand miles away, or about prices of meals on steamboats in the Danube or the Amazon river; but a conductor can greatly promote the popularity of his road by being posted on all these small details throughout his own vicinity.

Another bit of Scripture that the superintendent needs to remember is found in the 13th verse of that chapter—"A glad heart maketh a cheerful countenance." And nothing else makes it with complete success. Nowadays we tell the employee to stand up for the company (when it is criticised). But this implies that he himself likes the company. If he is dissatisfied with his pay, or his boss, or his surroundings, he will make a sorry job of trying to answer critics. Moreover, if he is 90 per cent. satisfied—and if, on being questioned at headquarters, he professes, carelessly, to be 100 per cent. satisfied—that remaining 10 per cent. of dissatisfaction will be sufficient to neutralize most of the superintendent's exhortations, unless the man has been made to reflect on the subject and systematize his thoughts.

To make all employees so well pleased with the company

and its policy that they will habitually praise it may seem to be a pretty large task; but will any one deny that this is an important feature in the campaign to promote politeness? Assuming that most employees who deal with passengers are fairly well satisfied with their lot there is still a considerable task to insure that they will act on this feeling habitually and will not let their words and their attitude be influenced by some grievance about a minor matter or by the unfriendly spirit of some fellow employee.

And there is still another verse in that fifteenth chapter of Proverbs which the brakeman may notice if he reads the chapter: It speaks of "the revenues of the wicked." The feeling that the capitalist gets more than a just share of the profits, and, therefore, should be classed as "wicked," is not found exclusively among the farmers in the back towns; it exists among railway employees. Frequently a labor-leader takes it as the text for a speech, and there are employees who, if they were to read this verse as referring to railway revenues, would see nothing inappropriate in the use of the word "wicked." Not that there are many such. Those who actually formulate ideas of enmity to the company are probably very few. But the root idea is common, without doubt, and to counteract its influence demands very much more than the occasional promulgation of a circular.

But, assuming that an employee has a good opinion of the company, that good opinion needs training and cultivation. If he is going to advertise the road's virtues, he needs to know about its weaknesses also, and how properly to estimate both good and bad features. The public knows—or thinks it knows—the bad ones, and the public's feeling cannot be ignored. After meeting a few criticisms which he knows to be justified, or even partly justified, the untrained trainman, finding difficulty in defending a part of his road's policy, when he has to admit that other parts are indefensible, relapses into the very common state of mind which simply evades the issue. He tells passengers, in substance, that it's none of his business to answer their questions. The general passenger agent himself, unless his road is one of those referred to by Mr. Thomas, where whistles have been superseded by harps, has to make some apologies and explanations when he confronts passengers face to face; and it is futile to expect trainmen and station men to praise the road as the G. P. A. would like to have them do it, unless he instructs them in his methods.

It is highly desirable that all employees who deal with passengers (or freight customers) be intelligent, polite and discreet. It is obvious that to make them so the company should do everything practicable in the way of instruction. Even were all employees well gifted in this respect at the outset it would still be desirable to have systematic instruction for the purpose of promoting uniformity. Why should not the traveling passenger agents give station men and trainmen courses of lectures? Would that be giving too much importance to a secondary matter? We think not. Politeness is, indeed, secondary to safety, and it may be said that we have not yet completed the education of our employees in that primary feature; but in practice the men are required to secure to passengers *both* safety and comfort; and two sides of a man can be cultivated simultaneously. The traveling men make it their business to show people the good qualities of the road and, where necessary, to explain those which are not good. If they are successful they ought to be able to talk instructively to those who have not had time to study the art of advertising so thoroughly.

The typical employee—the passenger trainman—is entitled to all the instruction in diplomacy that the company can reasonably give to him, for many of the questions that confront him have to be looked at from at least four sides: the wishes of the passenger, the actual rights or needs of the passenger, the wishes (instructions) of the company and the actual rights of the company. And usually he must decide quickly. Take the typical case of a passenger in a crowded car who cannot find a seat. He wants a seat, right there, at once. He may have no right to one, for the company may have done its best to provide an adequate supply, only to be thwarted by uncontrollable circumstances. Or, there may be a seat three cars in the rear and the trainman has got to decide whether he ought to go and find that seat or send the passenger alone. Sending the passenger implies the need of an apology for having to inconvenience him. The trainman has a duty to apologize for a lack that he himself is not responsible for. Or, perhaps, he knows that some trainmaster or other officer would have put on another car had he not been dull or careless. Trainmen usually do not know how to defend the company in cases like that. Still less do they know how to get out of the matter gracefully if they know that the superintendent habitually demands too strict "economy" in the use of cars. If a trainman tries to escape an unpleasant duty in such a case by referring passengers to the conductor he may be doing worse than to use his own imperfect talents, for the conductor, though he have twice the ability of the trainman, may just then have ten times as many perplexities.

Again, take the case of the passenger who unexpectedly finds that he must wait an hour or two for a delayed train. It may be that the company should be defended, or excused; or it may be that it deserves censure. The passenger, if an experienced traveler, possibly may know some of the causes of delays better than does the station-employee who has to deal with him. It is a difficult situation, yet it may be one of the best of opportunities to influence the public in the right direction, if only the right thing be said.

Giving soft answers is a great art!

## REPORT OF THE FEDERAL BOILER INSPECTOR.

THE first annual report of the chief inspector of locomotive boilers has been presented to the Interstate Commerce Commission, and incorporated in its twenty-sixth annual report to Congress. The information included, and the manner in which it is presented is hardly as fair to the railroads as it might be. This has been shown by many of the abstracts and quotations taken from it by the press. In the first place, in connection with the statement that the law requires that the railroads file rules and instructions for the inspection of locomotive boilers, it says, "notwithstanding this notice only 170 out of an approximate 2,200 carriers complied therewith." This would seem to indicate that the railroads deliberately disregarded the law, whereas as a matter of fact, and it is recorded in the minutes of one of the hearings before the Interstate Commerce Commission, this was done so that a uniform set of rules could be established to the mutual benefit of the government and the railroads.

Under the heading of "Accidents resulting from the failure of locomotive boilers and their appurtenances," are classified the numbers and kinds of such accidents. Although these pertain to the boiler of the locomotive they were not all "failures" in the true sense of the word. An analysis of these causes shows that about 90 per cent. of the deaths were due to low water in the boiler, which is a man failure, rather than one of design, and although the crown sheet failures are classified as to the contributory defects, the fact remains that low water was the prime and only cause of such explosions. Aside from explosions, 759 other accidents are listed, resulting in 10 killed and 796 injured. These are listed under items which do not contribute to boiler structural weakness, but are of the class of mechanical defects that are inherent in all branches of human endeavor, in which perfection cannot be obtained. This, of course, is not and should not be urged as an excuse, and every endeavor should be made to reduce the number and results of preventable accidents.

There was no comparison made of the number of accidents with previous years to show the effect of the government inspection, and in fact it would be almost impossible to obtain information on all the items mentioned in the report. There were some figures, however, presented at one of the hearings

on the number of shell and firebox explosions during the years 1905 to 1909, which compares with the present figures as follows:

| | Number | | Killed | | Injured | |
|---|---|---|---|---|---|---|
| | Av. for 1911-12. | Av. for 1905-9. | Av. for 1911-12. | Av. for 1905-9. | Av. for 1911-12. | Av. for 1905-9. |
| Shell Explosions.... | 3 | 3.1 | 27 | 6.1 | 41 | 4.7 |
| Firebox Explosions.. | 94 | 51.3 | 54 | 26.5 | 168 | 30. |

The figures for 1905-9 are the average per year and to be strictly comparable they should be increased in proportion to the number of locomotives, which was 43,787, as against 62,074 reported in 1911-12.

There is no clue to the extent of any of the damages or injuries. There were 243 defective squirt hose and connections which resulted in 245 injuries. This one item is nearly one-third of the preventable accidents. Burst water glasses is the next largest similar item, being 165 in number, resulting in one killed and 168 injured.

Another point which may be easily misunderstood is that of the defects. From the reading of the report it would seem that railroads had been grossly negligent, for out of 74,234 engines inspected, 48,768 were reported defective. Since the object of the law is to promote safety this statement could be interpreted that so many engines were unsafe for use. Analysis again shows that most of these defects were of a nature that in no way impaired the safety of the boiler. Again, in a large number of cases the engines were inspected just after completing a trip and before an opportunity had occurred for them to be repaired by the terminal mechanics. If all such defects were eliminated, and those engines were reported that were actually in service, or ready to go into service, the total number of defects would have been greatly reduced.

An attempt has been made to classify the number of defects found on each road, which as coming from a government inspector would lead one to consider it as being strictly accurate; but under staybolts broken we find that one of the largest roads in the country had only 25 reported from a total of 3,621 locomotives owned, which from the face of it to a practical man is wholly absurd, for there is no question, and, with the present construction of boilers, no getting away from breaking a large number of staybolts. While this statement may be correct in that only 25 were found broken, it would lead one to believe that the inspection had been carried on at a time most fair to the road. As against this we have 1,745 staybolts broken on a road owning 1,236 engines. From this it would seem that most any number of defects could be found if the engines were inspected at a time when the roads themselves did not have them in actual service, and acknowledged that they were out of repair.

It is also stated that 3,377 locomotives were ordered out of service, but the statement is not made that anyone of these 3,377 was found in actual service. Here again is another point for misinterpretation. The fact that only five of these cases were appealed to the chief inspectors shows that the railways realized the condition of the locomotives, and in many cases might not have used them until they were placed in proper condition. Considerable more comprehensive information as to the correct status of the locomotives in this country could have been given had the chief inspector confined his report to the violations, or intended violations of the law. As the defect report stands it is a very incomplete report of the total number of defects that all the locomotives in this country may have during one year of their existence.

While it is unfortunate that the report is such as to admit of misinterpretation, there are, on the other hand, reasons for congratulation on the work of the chief inspector of locomotive boilers for the first year of this new department. It would be impossible to organize and develop the work of such a department without some mistakes being made and that as few misunderstandings have occurred in putting the regulations into effect speaks well for chief inspector of locomotive boilers and the co-operation between his department and the railways generally.

# Letters to the Editor.

## GOVERNMENT OPERATION OF RAILROADS.

Eastern Railway of New Mexico;
Amarillo, Texas, January 15, 1913.

To the Editor of the Railway Age Gazette:

The suggestion of Mr. L. C. Fritch that the government take over the Union Pacific or the Southern Pacific, to use in demonstrating proper railway regulation, with the proposal to appoint members of the Senate from states through which the road runs, and the Interstate Commerce Commissioners, as directors, presumably with Franklin K. Lane as president, is very interesting.

Then, following the recent precedents set by Indiana and by New England, if the patrons of these government roads wish to reach the men high up, in case of accidents, we may expect to see them indict the president and the directors on criminal charges.

Perhaps, if politicians see their perilous position of responsibility for mistakes of subordinates government regulation may not be so popular. Possibly, however, they might claim immunity under the law that you cannot sue the king.

Avery Turner.

## SALES OF INTERNATIONAL SIGNAL STOCK.

New York, January 14, 1913.

To the Editor of the Railway Age Gazette:

In a recent issue you published a letter from Mr. Ray, chief engineer of the Delaware, Lackawanna & Western, that might lead your readers to infer that this company was trying to sell stock to the public, and such an impression would do us a very grave injustice.

The facts are these; more than six years ago, our own stockholders set aside a reserve fund of $200,000 of treasury stock, and not until our inventions had been so perfected as to be "approved for test" by the Block Signal and Train Control Board was any offering of it ever made, and then only to our own stockholders.

At the annual meeting in September, every stockholder present joined in signing and issuing a statement to those unable to attend the meeting, urging each of them to subscribe for their pro-rata of this reserved treasury stock as soon as possible; and this appeal was mailed to each stockholder with the report of the annual meeting.

This was just as legitimate—to urge them to hurry up their subscriptions—as would be any other lawful act authorized by a meeting of the stockholders.

None of this treasury stock has ever been offered to the general public; nor have we allowed one line of advertising or descriptive matter to be published regarding our automatic train stop. Had we been "stock jobbers," such an article would have brought us hundreds of buyers, but we refused offers of reputable papers; nor will we allow any advertising until our train stop has been thoroughly tested and proved successful.

Our bulletin No. 16 was mailed only to stockholders of this company, and *not* to "railroad employees" (unless they were also stockholders), nor to the general public. As we construe it, the bulletin sets forth very clearly that the installation of the Lackawanna is purely for testing purposes, and its success or failure has no binding action of any kind on that railroad, and we certainly do not agree with any opinion that it was misleading. Mr. Ray's letter does not mention the fact that his road asked for and received from us a signed agreement fixing the prices at which future equipment could be bought from us in case our apparatus was desired by it.

Only treasury stock, and not personal stock, was offered for subscription. Every cent of the proceeds from its sale goes directly into the company treasury for a working capital, and not into the pocket of any individual. And this treasury stock

is offered only to present stockholders, who have been kept informed of company conditions by the various bulletins; and the bulletin specifically states that the subscriptions are being solicited for the very purpose of making this testing installation and supervising the tests. The inventor has been for years an associate member of the Railway Signal Association, and we have the very highest of bank, trust company, and business references. We invite the fullest investigation of both ourselves and our automatic train stop.

THE INTERNATIONAL SIGNAL COMPANY,
Jean F. Webb, President.

## CONTINGENT SCHEDULES ON THE VIRGINIAN.

NORFOLK, Va., January 13, 1913.

TO THE EDITOR OF THE RAILWAY AGE GAZETTE:

G. W. Turner, in the December 13 number of the *Railway Age Gazette,* takes exception to a statement made in the article on our contingent schedules to the effect that a flagman has served no useful purpose unless he has actually stopped or warned a train which otherwise would have come into collision with the train he is protecting. As to this, the only point that may be discussed is, whether the flagman should go out (provided he is furnished reliable and authorized means of so determining) when there is no train to be stopped. The Virginian contingent schedule gives the men in charge of a train this authorized information which, with respect to following trains, is equal to an absolute block; and without doubt there exist on certain portions of every railroad conditions of train movement where this system of moving extra trains could be utilized to advantage.

We are making no argument against the flagman going back to protect the rear of his train. The only claim is that there should be no greater need, under certain conditions, for such protection, than there is for sending a flagman ahead, under practically the same conditions, to protect the head end of his train.

The only agencies (with the exception of the staff), so far as I know, which are depended upon for moving trains against each other on single track are time schedules and train orders, with the red flag as an auxiliary when a train fails to clear. Block signals are regarded as aids, but for well known reasons are seldom depended on as absolute protection for either the front or rear of a train.

Now, if a time schedule is regarded as paramount, and the red flag auxiliary protection for the front of a train, by what process of reasoning is it determined that the red flag becomes paramount and the time schedule worthless for the protection of the rear of a train, where an oversight is much less certain to result in a collision? Why is it thought that men may be depended upon to avoid numerous opposing trains, but not the one following train with which they might become involved by our schedules?

Is it not possible that it is due to the obsession of fixed opinion, proceeding from continuous habit of thought in one direction? I can say for the Virginian Railway that when protection is required, our men protect more promptly and in much better form than they did under the old conditions; and in view of the fact that trainmen have knowledge of following as well as of opposing trains we consider our plan is in complete harmony with the "safety first" proposition.

Referring to the example given where trains running late on contingent schedules 30 and 31 are used to illustrate a condition where it is claimed that failure to deliver a meeting order to C. S. No. 31 would result in opportunity for collision, I will say that failure of delivery of the order to either or both trains, whether on time or late, and regardless of where the order is placed or where the trains are directed to meet, could not possibly result in collision, except by the most palpable oversight and direct violation of the rules. This is due to the fact that until a meeting point is provided by train order, the two trains are clearing each other. If C. S. No. 30 received the order and C. S. No. 31 did not; C. S. No. 30 would proceed to the meeting point stipulated in the order, while C. S. No. 31 would continue to clear the time of C. S. No. 30, thus giving no opportunity for collision.

The presumed difficulty about starting the wrecker on short notice on account of trains not protecting rear is more imaginary than real. It is no more difficult to get notice of the wrecker to trains of the same direction than to trains of the opposite direction. The same line of reasoning might be used as argument that trains from the opposite direction ought not to be run at all. As a matter of fact the schedules might, under certain conditions, be of considerable assistance in getting the wrecker started against opposing trains.

As to the small road proposition, an examination of published statistics, which are available to everyone, will disclose a several times greater density of traffic on the Virginian Railway than on any one of the larger systems mentioned by Mr. Turner.

The speed schedule plan submitted by Mr. Turner does not, from my point of view, work out to a successful conclusion. I doubt whether everyone will agree that the matter of figuring out the numerous run late schedules would be as simple a process as represented. That, however, is only a matter of opinion, and my criticisms will be confined to what I consider to be defects of the system.

In all of the examples of orders submitted by Mr. Turner, the westbound trains are given right over all eastbound extras and in order No. 5 right is given over all trains; copies of the orders to be placed at Pablo or distant terminal for trains not yet in existence and at intermediate points for trains already in existence. In view of the fact that the eastbound trains then on the road would not be clearing the schedules of the westbound trains until advised of their existence and there being no restriction placed upon westbound trains except the schedules, it would be impossible, without danger of collision, to start a westbound train from Farley until the notification order has been signed for and actually delivered to all of the trains over which right is given. To simply place the order would not be sufficient; actual delivery must be effected.

It is apparently the intention to run trains on high speed schedules and slow speed schedules indiscriminately, according to class of traffic and the time they are ready to start. To start a high speed train behind a slow speed train without giving notice to the slow would be unsafe and in violation of the rules. It would, therefore, be necessary before starting a train on a high speed schedule from Farley to place copies of a notification order to all slow speed trains of the same direction then on the road; and such orders would have to be actually signed for and delivered before the train could be moved from Farley. Additional provision would have to be made for work trains. Under the circumstances how would it be possible to start trains "on a moment's notice," as is claimed?

Suppose a train about to leave Pablo receives a copy of order No. 5, how are the men receiving the order to determine whether engine 400 is running eight hours late on schedule A of yesterday (in which event it would be already overdue) or the schedule of today or of tomorrow? If I am right in assuming that no time limit is placed on the rights conferred by the order, I should say that the only safe conclusion would be that the train is already overdue and the opposing train would not be justified in leaving Pablo.

I may not have a correct understanding of all of the details in connection with the proposed speed schedule plan, but the objections I have mentioned would, if sustained, appear to me to be sufficient to seriously impair its usefulness as a system.

A. T. WOODRUFF,
Train Rules Examiner, Virginian Railway.

# CANADA'S MOST SUCCESSFUL RAILWAY YEAR.

**A Detailed Study Showing the Growth of Mileage, Facilities, Traffic and Earnings During the Year Ended June 30, 1912.**

By J. L. Payne,
Comptroller of Statistics, Ottawa.

During the year ended June 30, 1912, the railways of Canada built 142.53 miles of second track and 599.39 miles of yard track and sidings. This may not seem like much construction work, and it will probably be regarded as an odd way to begin an article which is intended to present a picture of the most prosperous year in the history of Canadian railway interests. But, properly appraised, these additions mean a great deal, and the singling out of such facts will not appear at all peculiar to modern railway men. Moreover, they imply other conditions equally satisfactory. Additional second track and more facilities for the expeditious handling of traffic are today the outstanding needs presented by the general transportation problem of this continent. The manager of every large railway is in despair over this matter; and his perplexity is intensified by the self-reproach that such a situation could have been saved by foresight and faith. Land which could have been had at a moderate figure forty, twenty, or even ten years ago, is now held at a prohibitive price. Real estate is advancing rapidly in Canada, too; but it may still be acquired at relatively low cost, and optimistic, perspicacious railway men are getting hold of it for sidings and terminals. In doing this they are slightly anticipating their needs; but they are showing sound judgment. Railway expansion in Canada is proceeding at an unprecedented rate, and the day is near at hand when this elbow room at terminals, and these longer and more numerous sidings will justify themselves in net earnings.

It is worth while to give the particulars which are lacking in the foregoing paragraph. The addition of 142.53 miles of second track brought the total up to 1,752.49. Again this may seem a small matter; but that mileage was equal to 6.5 per cent. of the total first track mileage of the Dominion, and was 86 miles more than were added in 1911. Six years ago there were but 1,067 miles of second track in Canada, or 4.7 per cent. Of yard track and sidings there were 4,092 miles in 1907, and 6,149 in 1912. This increase was from the ratio of 18.2 per cent. to 23.0 per cent. of first track mileage. While single track mileage increased 19 per cent. in six years, second track increased 64 per cent., and yard track and sidings 50 per cent. This was good business, and its real significance will be better understood when it is pointed out that in 1910—which is the last year for which official figures for comparison are available at the moment—yard track and sidings in the United States had increased but 30 per cent. during five years. In other words, it is the rate at which Canada is coming that gives these figures special value. And this matter of relative progress will be found to be the conspicuous feature in all aspects of Canada's railway advancement in 1912.

There is another feature of railway administration in Canada which is distinctly on the side of betterment. During the past four years the expenditure on maintenance of way and structures has represented an average of 21.50 per cent. of the total operating expenses. This has been better by 2 per cent. than the railways of the United States have averaged during the same period, and it reflects a disposition to secure efficiency. The upkeep of equipment has also been equal to over 20 per cent. of operating expenses, and that percentage is understood to demonstrate sound railway management the world over; but it falls below the United States average. In the light of what has been done in this regard in Canada in the past, it points to safe policy. In 1907 the outlay on way and structures was $930.30 per mile of line; in 1912 it was $1,179.11. The total expenditure for maintenance of equipment in 1907 was $965.01 per mile; in 1912 it was $1,115.41. This is also below United States figures; but the ratio of increase has been greater on the Canadian side of the line. The point which these facts emphasize is, that the railways of the Dominion are not fattening immediate net earnings by neglecting either roadbed or equipment, in which they are merely true to the best traditions of prudence. They are living up to the highest standards in all that makes for the economical handling of traffic.

First track mileage was increased by 1,330 miles during the year, bringing the total up to 26,727. In no preceding year had such a large addition taken place. Eighty-three per cent. of the new mileage put in operation was in the western provinces, and, with avidious appetite, they are crying out for more. As a matter of fact, 1,623 additional miles of line were in actual operation in 1912, and 1,738 had been completed; but officially these 3,361 miles were regarded as being under construction. Had they been taken into the count, the operating mileage of Canada would have reached 30,088, or a larger total than that of Great Britain. There were altogether in the official sense 8,826 miles under construction on June 30, 1912; but the definition of that term would not be strained if it were said that more than 10,000 miles were actually in process of being built. "Under construction" applies to work lying all the way between the exploratory survey and the opening of the road for traffic. It might be observed, however, that, while the preponderance of this prospective mileage is in the West, slightly over 40 per cent. of it is located in the East. Turning again to the relative idea, it is encouraging to Canadians to realize that, measured by population, they are building railways at twice the rate of their progressive neighbors to the south. They are still maintaining the unique position of having the highest mileage per capita of any country in the world, yet see room for further growth in the fact that by the territorial test they are at the very foot of the list.

Without any qualification, it may be said that the Canadian people are at this juncture concerned more in securing two things than anything else—markets and transportation facilities. To get these they have not only made very considerable sacrifices; but, with perfect cheerfulness, are prepared to make still larger drafts upon the public treasury and the national credit. The burdens arising out of what has already been done to aid railway construction are represented in cash subsidies of $208,072,074, contributed by the Dominion government, by the provincial governments and by municipalities; in land grants aggregating 56,052,055 acres, and by guarantees aggregating $245,070,045. For 1912 the increase in cash subventions over 1911 amounted to $5,892,818, in land of 6,000,000 acres and in guarantees of $96,733,688. The government is also constructing the eastern division of the Grand Trunk Pacific at a cost which the minister of finance announced in parliament would probably reach $243,000,000. An expenditure of $117,000,000 has already taken place. These items added together make $696,142,119, without placing any money value on the land grants. It is impossible to say what the latter are worth; but the holdings of the Canadian Pacific and the Canadian Northern in the West would realize not less than $150,000,000 at prevailing prices. During the past year railway lands averaged $13.70 per acre, and the sum received from sales amounted to $18,200,000. The Canadian Pacific had an average of $15.99 for 669,639 acres; but received $40.25 per acre for 3,270 acres of irrigated land. The Canadian Northern averaged $15.17 per acre, as compared with $12 in 1911. Guarantees have been the popular form of

aid during recent years, and governments of the western provinces have assumed obligations in that regard beyond $150,000,000. In the majority of instances the guarantee is of both principal and interest for a long term of years. In the case of the Grand Trunk Pacific, the Dominion government not only guarantees the interest on bonds, but makes up the difference between the sale price and par.

Canadian railways hauled 89,444,331 tons of freight in 1912, or 9,560,049 more than in 1911. This was the largest increase in any year. There were also 41,124,181 passengers carried during the year—a gain of 4,025,463 over the preceding year. This larger volume of traffic created a heavy tax on equipment and, in the autumn months, the movement of the western harvest was marked by considerable congestion. Nevertheless, the conditions in that regard were much better than in 1911. This was due in part to more rolling stock, but chiefly to better organization. The additions to equipment in 1912 embraced 265 locomotives, 13,760 freight cars and 433 passenger cars. The demand for new freight cars has been far beyond the capacity of domestic industries, and during the year orders were placed in the United States for over 14,000 units. The total equipment orders of the Canadian Pacific during the past year had a money value of $48,000,000, which is said to have been double the amount ever given within such a period by any railway in America. These orders included 467 locomotives, 26,653 box cars, 94 sleepers, 25 diners, 57 tourist cars and a great deal of other rolling stock. The available supply of cars in the Dominion for freight service reached a total of 140,918 on June 30 last, and on that date the official statistics show a material increase in carrying capacity. For example, in 1907 there were but 9,790 cars of the 80,000 lbs. class in Canada; in 1912 there were 21,951. Of the 100,000 lbs. class, the number during the same period had grown from 3,448 to 7,135.

There was a betterment in passenger density over 1911 of 6.291, and passenger miles increased by 304,282,712. Gross earnings per passenger train mile were $1,390, as compared with $1,263 five years ago. Per freight train mile the advance was from $2.069 in 1907 to $2.494 in 1912—equal to 20 per cent. Per mile of line, the number of passengers carried was 1,539—a gain of 79 over the preceding year. A comparative summary of these and other statistical data is as follows:

| | 1911. | 1912. |
|---|---|---|
| Number of passengers | 37,097,718 | 41,124,181 |
| Passengers carried one mile | 2,605,968,924 | 2,910,251,636 |
| Passengers one mile per mile of line | 102,597 | 108,888 |
| Passengers per mile of line | 1,460 | 1,539 |
| Average passenger journey—miles | 70 | 71 |
| Passengers per train | 60 | 62 |
| Earnings, passenger service | $58,317,998 | $65,048,187 |
| Average receipts per passenger | $1.360 | $1.375 |
| Average per passenger per mile—cents | 1.944 | 1.943 |

There was a gain in 1912 of 3,509,712,232 ton miles over 1911, while freight density was increased by 99,947. The average revenue per ton per mile declined from .777 in 1911 to .757 in 1912, which scarcely gives support to the persistent complaint that freight rates are being advanced. As indicating the activity in freight movement during the year, loaded cars had a mileage of 1,102,719,543, as compared with 946,946,917 in 1911. There was an appreciable betterment in the average load of both cars and trains, and in the number of cars per train, while the length of haul went up by 18 miles. The following summary of facts for 1911 and 1912 will give a concise view of the freight situation:

| | 1911. | 1912. |
|---|---|---|
| Tons hauled | 79,884,282 | 89,444,331 |
| Tons hauled one mile | 16,048,478,295 | 19,558,190,527 |
| Tons, one mile per mile of line | 631,829 | 731,776 |
| Average haul, miles | 200 | 218 |
| Average tons per train | 305 | 325 |
| Average cars per train | 18.03 | 18.19 |
| Average tons per car | 16.91 | 17.87 |
| Average per ton per mile—cent | .777 | .757 |

One or two things occurred during the year which emphasizes the part played by transportation facilities in the economic life of nations and communities. Canada is essentially an agricultural country, with large live stock and dairly interests, and yet in 1912 she imported several million pounds of mutton from Australia, and several million pounds of butter from New Zealand. It would have been impossible to go farther for such products. It cost, however, half as much to bring a pound of mutton from the Antipodes to the Pacific coast as it did to deliver it from the butcher shop in Vancouver to the home of the consumer. That is to say, this mutton was brought from Sydney to Vancouver at a freight cost of slightly over two cents a pound; and the special committee which investigated the meat problem at Washington declared that it cost four cents per pound to maintain a delivery service between the retailer and his customers. The New Zealand butter was brought to Vancouver by steamer, and thence by rail as far east as Montreal, where it sold at 40 cents per pound to consumers. The freight cost by water and land was less than four cents per pound. That this was not a mere spasm in trade, is demonstrated by the fact that this winter millions of pounds of New Zealand butter will be delivered in Canada under contract. A more striking illustration of what transportation facilities do could not well be found. It demonstrates very clearly that the producer and his market are not separated by miles, as is popularly assumed, but by freight charges. One should not say: "New Zealand is 10,800 miles from Montreal"; but rather, "New Zealand is 3.8 cents per pound from Montreal." If either the butter or the mutton had been produced 150 miles away from Ottawa, and it could not have been moved by either steamer or railway, the cost of hauling that distance would have been greater than it actually was from New Zealand or Australia.

The record gross earnings of $219,403,753 were the inevitable result of increased traffic. A betterment of over 16 per cent. in total revenue for 1912 suggests material expansion in production and marketing. Freight yielded over 75 per cent. of the year's gain, although, as has been said, the ton-mile rate was lower than 1911. This gain was chiefly in the hauling of 3,500,000 more tons of agricultural products, and 2,750,000 more tons of manufactures—indicating a larger harvest and greater industrial activity in the Dominion. There were further earnings of $21,221,775 from outside operations, with a balance to the good of $5,888,157. These operations were principally in the conduct of steamship business and hotels; for it must be borne in mind that Canadian railways are getting to be large owners and operators of steamers. The Canadian Pacific alone has a fleet of 70 vessels, of which 16 are on the Atlantic and 3 on the Pacific. The remainder are in service along the Pacific coast, on the Great Lakes and on the lakes and rivers of British Columbia. The Canadian Northern has two large steamers on the Atlantic, and the Grand Trunk Pacific has two on the Pacific coast. It is obvious that railway traffic in an exporting and importing country like Canada must create business on the ocean; and railway owners of Canada seem disposed to control things at both ends. Railway hotels are also multiplying, and would seem to be profitable. The Canadian Pacific has made the largest investment in this regard; but both the Grand Trunk and Canadian Northern are following the tempting example set. Earnings from express business have increased by 61.5 per cent. in five years. All the leading railways carry on a service of that nature, first paying themselves liberal rates for "express privileges," and then declaring attractive dividends from what is left over. They also earn millions out of their telegraphs, which are spread over the whole country, and some of them control large electric railway interests. Whatever else may be said, it must be admitted that these railway hotels, steamers, and express and telegraph services are the best in the country. The railways conduct such interests with splendid skill.

Gross railway earnings in 1912 showed an increase of $30,670,259 over the preceding year. Thirty years ago the total earnings were less than this increase. These gross earnings equalled $8,209 per mile of road, as compared with $6,397 five years ago. In 11 years the aggregate earnings per mile have

more than doubled. Revenue came from the following sources in 1911 and 1912:

| | 1911. | 1912. |
|---|---|---|
| Passengers | $50,566,894 | $56,543,664 |
| Mails | 1,869,414 | 1,914,720 |
| Express | 4,674,135 | 5,294,388 |
| Baggage, parlor cars, etc. | 1,207,555 | 1,295,415 |
| Freight | 126,570,534 | 149,961,140 |
| Station and train privileges | 826,252 | 1,086,687 |
| Telegraphs, rents etc. | 3,018,710 | 3,307,739 |
| Total | $188,733,494 | $219,403,753 |

It will be observed that while there were substantial increases in all the divisions, passengers and freight scored heavily. Per ton, gross earnings from freight rose from $1.561 in 1911 to $1.655 in 1912. In this regard the gain in five years has been equal to over 12 per cent., which is largely accounted for by the hauling of a larger volume of high class commodities, as was pointed out in a preceding paragraph.

Operating expenses in 1912 were equal to 68.7 per cent. of gross earnings, and amounted to $150,726,540. In this connection there was exhibited a further rise in the cost of running a train one mile. That cost has almost doubled since 1899. It was then 77.9 cents; it is now $1.493. An analysis of items making up the total expenses of operation reveals a persistent advance in the cost of fuel and labor. The conditions in regard to employees would seem to be the same on both sides of the line. The unions co-ordinate and the process of leverage is identical. Just where the upward movement will stop nobody seems to know. Operating cost in 1912 amounted to $5,639 per mile of line.

It would take up a good deal of space to deal comprehensively with the financial position of Canadian railways. The salient facts alone can be given place. The official statistics show a capitalization in 1912 of $1,588,937,526, of which $770,459,351 was represented in stocks and $818,478,175 in bonds. This liability would be equal to $59,454 per mile of line if the whole sum were divided by the mileage given in a preceding paragraph; but neither the divisor nor the dividend would in that case be correct. After deducting from capital figures duplication and dead liability, and excluding the mileage of government owned lines, the true quotient in the calculation is $50,832 per mile. That is a relatively low figure. It is slightly below the actual cost per mile of government owned lines in Canada. It is well secured. Against it stands a steadily swelling volume of gross and net earnings. The former have increased by 128 per cent. in ten years, and the latter by 141 per cent. Dividends have gone up from a total of $12,760,435 in 1907 to $31,164,791 in 1912. The dividend payments of the past year were equal to 4.05 per cent. on the entire stock liability—good or bad, alive or dead. The railway bonds, in so far as they are a real liability—that is, when duplication has been eliminated—are gilt edge. Both principal and interest are safe. Thirty per cent. of them are backed by government guarantees. The capital liability of Canadian railways is growing at the rate of about $100,000,000 a year, and in this growth the United States has both a direct and indirect interest. To the extent of nearly $100,000,000 it has been created by American ownership on the northern side of the boundary, and Americans are the holders of an enormous volume of Canadian railway stocks and bonds. The indirect interest arises from the fact that every mile of railway built in Canada means a call upon American producers for more or less of the equipment and operating necessaries. For example, the United States supplies 95 per cent. of the lubricating and signal oil used by Canadian railways.

Canada, by every proper test, is going ahead rapidly. In many parts, particularly in the West, the activity is spoken of as "a boom." Whether or not the term applies depends wholly upon the point of view. Certainly real estate is selling at high figures in the more promising centers. But what has created these centers? The railways in every case. And, while the railways have primarily brought about this new scale of values in real estate—real estate which yesterday was worth but a few dollars an acre for farming purposes—the foundation of what is taking place in the West is the rising tide of immigration. Now, as in the past, and as it always will be, the so-called value of land is vested in the people on the spot. As people gather in communities the rise in land values is merely an expression of permanency, and that permanency cannot exist without transportation facilities; which is another way of saying that Canada's boom must be reflected in railway expansion. The ground work of development has been laid; for history is sure to repeat itself in the sense that what happened in the American West between 1860 and 1890 will happen in the Canadian West between now and 1930. An established flow of population creates accretive power; and in the case of Canada that power rests on the fact that free farming lands will be a thing of the past when the public domain of the West is taken up.

The part which Americans are taking in the peopling and development of the Canadian West, and of Canada generally, is quite important. Hundreds of thousands have crossed the line during the past six or eight years to take up farming land, and many others have come over to share in the money making chances which arise in new and rapidly growing communities. Upwards of 1,500 miles of railway are now being operated in Canada, representing a capital outlay of $100,000,000, which are mere extensions of American systems. Millions of tons of freight move annually across that imaginary line called the international boundary. It is very much an imaginary line so far as the railways are concerned; for trains move backward and forward over it with the same freedom they cross state lines. Canadian railway corporations own thousands of miles of line in the United States. Reports to Ottawa are made on precisely the same forms, and governed by the same classifications, on which reports are made to Washington. For railway purposes the line is unrecognizable; but it is there, and the fact that it will remain there need not in any sense hamper the growth of international transportation interests. Those interests will and must increase. The flag is scarcely an element in the matter, even as a sentiment. Trade follows the ship and the railway. Canada is the second best customer of the United States, and the United States is Canada's second best customer. The prosperity of Canada means more business for the United States, whether that prosperity is demonstrated in additional railway mileage, in swelling population or in larger production. Hence, the story of Canada's best and most encouraging railway year must be a matter of genuine, and not entirely unselfish satisfaction to those who live south of the forty-ninth parallel.

Reference to accidents can hardly be avoided. In 1912, Canadian railways killed 568 persons and injured 3,780. Of the killed, 47 were passengers. One passenger in every 872,855 was killed, which was an abnormal ratio. One passenger in every 84,792 was injured, which reflected a very bad year in respect of casualties of that class. A study of accidents to employees over a period of years, reveals the somewhat surprising fact that relatively the same number suffer injuries every year from practically the same causes. That is to say, in proportion to numbers there are about the same number killed and injured every year from say jumping on or off trains, from coupling or from other avoidable causes. It might be supposed, the number of accidents would have more or less direct relation to train mileage, as representing the measure of risk; but such a law cannot be found in an analysis of casualty statistics. Accidents at highway crossings were numerous in 1912, notwithstanding the steady elimination of grade crossings and the installation of many warning devices. The high proportion of trespassers killed tells the story of fatal haste at city crossings when the protective gates are down. The killing of 235 trespassers in other ways rather shows that Canadian railways will soon learn to sympathize with American roads in the matter of the tramp nuisance.

The number of employees reached 155,901 in 1912—an increase of 14,677 over 1911. The additions were equal to 31 per 100 miles of line, and brought the total up to 583. The salaries and wages bill for the year was $94,237,623, including outside oper-

ations; but making a deduction of $6,937,984 on that account, the total for comparison with other years was $87,299,639. This was $12,685,901 higher than the figures for 1911, and the total was equal to 58 per cent. of operating expenses. On the basis of the statistical family, it has been estimated that one person in six gets a livelihood, directly and indirectly, out of the operation of railways in Canada. The calculation would not have to be strained to bring the ratio up to one in five. As an example of the indirect interest, it is probable that the supplying of 15,000,000 ties in 1912, at a total cost of $6,500,000, represented an income of $700 for 9,285 persons; or the livelihood of 46,000 souls on the statistical basis. Incidentally, it might be observed that the cost of ties has more than doubled in fifteen years, and the use of treated sleepers has commenced as a matter of economy. The average cost per tie in 1912 was 44.7 cents.

Looking back over what has been written, it will be observed that Canadian railways in 1912 made entirely new, and in some respects surprising, records in practically every statistical aspect. The additions to mileage of first track, second track, and yard track and sidings, the increase in traffic, the additions to equipment, the gains in all the earning divisions, the multiplication of employees, and the betterments in trainload and efficiency tests in general were the largest in the history of the Dominion. By every standard of appraisement the year showed unexampled prosperity. More important, however, than these immediate results, is the warranted assumption that an era of extraordinary expansion in railway interests has begun. The railway people are keenly alive to their trackage and equipment needs in view of swelling immigration and the rapid development of the western provinces. They are adding to their transportation facilities on a scale which mirrors their optimism, and yet, build as quickly as they may, it is not probable that they will be able to get ahead of their needs. Traffic keeps up with new mileage. This is a situation which represents the fruition of long-cherished hopes; but Canada does not close her eyes to the fact that in this growth the United States has a genuine interest. It does not mean rivalry. It means, as has been said, larger business on both sides of the line.

There is one further feature of the Canadian railway situation which calls for a closing observation. No matter what expansion may take place or how many new lines may be built, the tendency to centralization seems likely to continue. The smaller roads will be absorbed by the larger. During the past year this process has been actively in operation. The annual report of the Canadian Pacific to its shareholders is largely taken up with the story of absorption. There are some who profess to see danger in this; but there will always be another side to the matter. Whatever else may be true, the change of control carries with it development and efficiency. Strength succeeds weakness. In the last analysis transportation facilities are bettered.

## A FIRING-UP HOUSE FOR REPAIRED LOCOMOTIVES.

Where there is an engine house located conveniently in relation to a large repair shop, the locomotives are generally placed in it for firing-up after the erecting shop work is completed and preparatory to the trial trip. While this avoids the inconvenience of smoke and dirt in the erecting shop, it frequently interferes with work in the engine house, particularly if the latter be located at a busy terminal. In some cases this has been avoided by providing a special shop, or running shed, for the purpose.

The Delaware, Lackawanna & Western has just completed what is termed a "firing-up" house in connection with the locomotive repair shop at Scranton, Pa. This building is located directly across the transfer table from the main machine and erecting shop, and is used for housing the locomotives while the tenders are coupled on and made ready for service and while they are being fired-up, and also for making the running repairs reported by the engineer after the trial trip. It is 85 ft. long and 70 ft. wide, and has four tracks, each having a 50 ft. pit of concrete construction. It is heated by steam, is piped throughout for hot water, etc., and is lighted by electricity, with extension lights for the convenience of the workmen. The entire structure is of steel, concrete and brick, with the exception of the floor, which is of creosoted blocks. A large monitor extends across the center, and smoke jacks of steel and concrete have been installed at both ends of each pit, so that locomotives may be either headed or backed in. We are indebted to H. C. Manchester, superintendent of motive power and equipment, for this information.

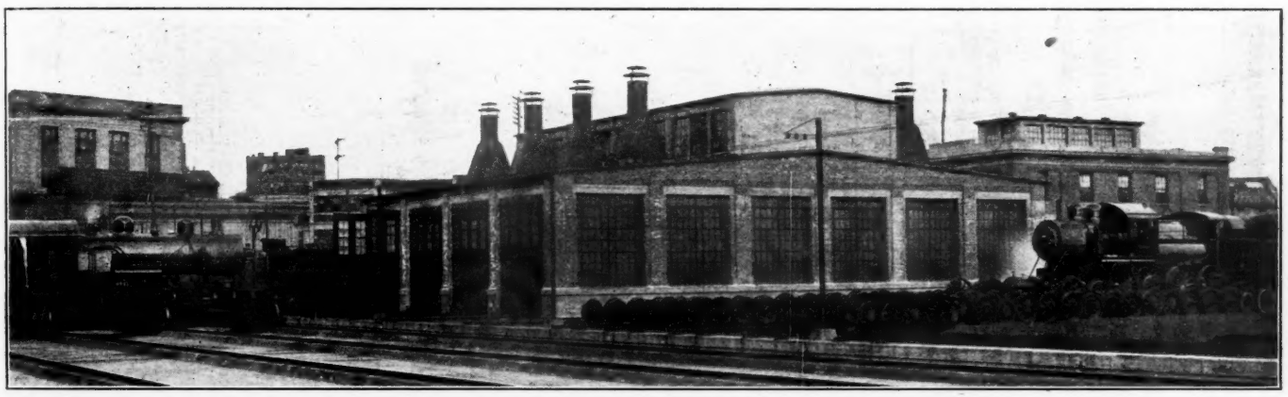

**Separate Building for Finishing and Firing Up Repaired Locomotives; Delaware, Lackawanna & Western.**

---

RAILWAYS IN NATAL.—In Natal a small beginning was made in 1860 on the 4 ft. 8½ in. gage, altered subsequently to the Cape gage (3 ft. 6 in.). The main line leading to Johannesburg, a very heavy one, was opened in 1895. When the line reaches the Transvaal, it attains a level of over 5,000 ft. This main line has several branches, and the total mileage at the date when the railways were taken over by the union, two and a half years ago, was 998 miles.

RAILROAD DEVELOPMENT IN URUGUAY.—For the first time in its history the earnings of the Central Uruguay Railway for the past year exceeded $1,000,000. The extensions to the northeast have been completed to the city of Melo, not far from the border of Brazil. The Eastern Railway has opened the line to Maldonado, with a corresponding increase in its business. Work has been begun on the Midland Railway, between Tres Arboles and Piedra Sola, and applications for concessions have been made for new railway lines between Melo and Acegua and from Salto to Rivera.

## A COLLAPSIBLE PLATFORM AND VESTIBULE.

The Barney & Smith Car Company, Dayton, Ohio, has recently applied for letters patent on an interesting innovation in the construction of vestibules and platforms for passenger cars. This has for its chief purpose the protection of the ends of the car body in collisions and wrecks.

The device includes the entire platform and vestibule, from the end of the car body to the nose piece of the platform, and is so constructed that in case of a shock more severe than encountered in ordinary service, the platform and vestibule will collapse or crush, forming a cushion space of nearly 8 ft. between two cars, before the car bodies come together. In an eight car train this would amount to about 50 ft. of cushion construction, planned to absorb the shock and damage before the car bodies containing the passengers could be seriously disturbed.

This is accomplished by stopping the center sills at the end of the car body proper and fastening platform extensions to them. The connection between the extensions and the center sills is made of such strength that the rivets will shear when the car receives a shock more severe than the maximum service shock. The steps, vestibule doors and hood will of course collapse when the rivets shear on the sill extensions, and these will further tend to absorb the energy of the shock.

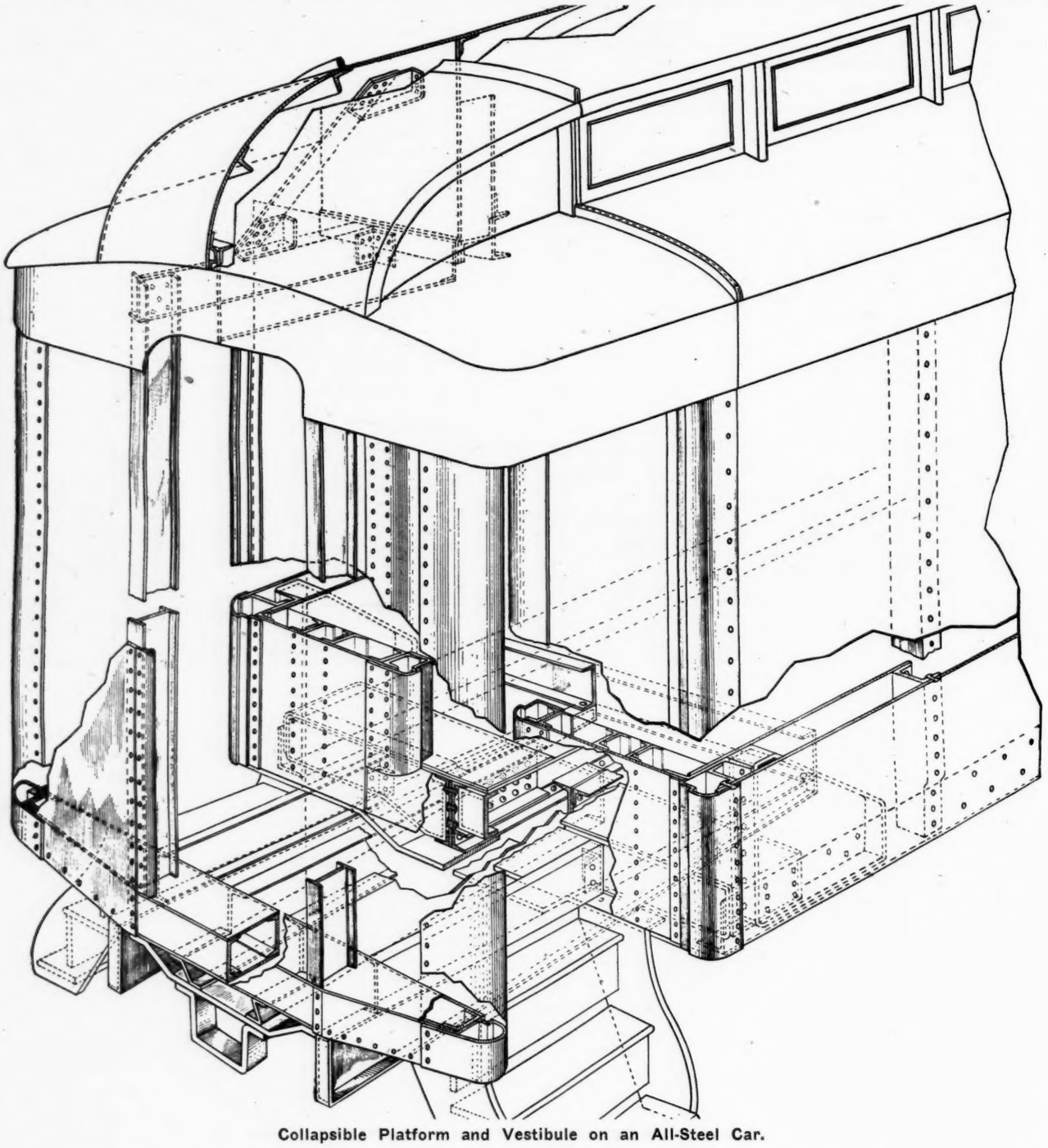

**Collapsible Platform and Vestibule on an All-Steel Car.**

One illustration shows a car of steel construction throughout, while the other shows one with the collapsible extension made of wood. This wood construction may be used with all-steel, all-wood or composite car bodies. It will be noted that the end of the car body is designed for great strength, by

using a number of heavy steel sections to form the door posts, corner and intermediate posts, and that the intermediate posts have been further reinforced by angles riveted to the inside. These angles in practice would be about 4 ft. 6 in. long, as it is claimed that in case of the cars attempting to telescope the point of greatest shock is never greater than 18 in. or 20 in. above the floor line. The entire end of the car body proper is covered by a heavy steel plate, extending from the upper part of the roof to the bottom of the end sill. This is to further strengthen the end of the car, hold the end posts in proper position and prevent parts of the vestibule from piercing the end of the car. This end plate, which is made in pieces securely riveted together, is also so designed and fastened to the roof members that in case of collision, if the shock were not wholly absorbed by the collapsible platform, the entire end of the car roof would be pulled downward, forming a protection by forcing the next car or locomotive to be thrown upward and over in place of going through the end of the car.

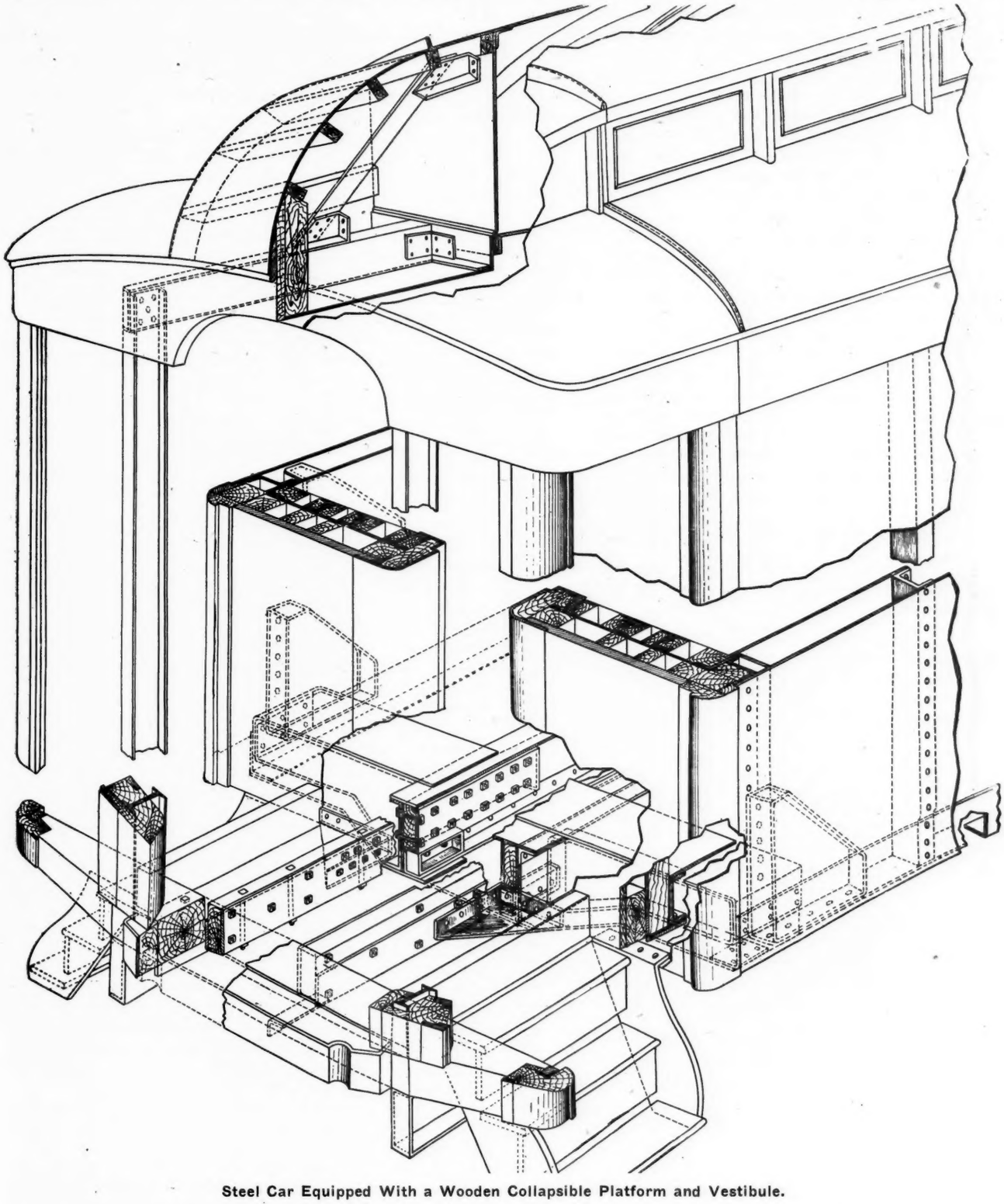

**Steel Car Equipped With a Wooden Collapsible Platform and Vestibule.**

The entire platform, vestibule, hood and sill extensions are a unit, detachable and separate from the car body proper, and

can be applied, if necessary, after the car is built. In case of collision it is presumed that these parts would be the only ones greatly damaged and could, therefore, be removed and replaced at a minimum cost and delay.

As may be seen from the drawings, extra heavy steel beams are used for vestibule center posts. These beams are securely fastened above and below, the idea being that should one of the cars attempt to ride over the other the beams, if they were hit about the line of the nose piece, would be of sufficient strength to cause the rivets in the sill extensions to shear off. In order to further prevent one car riding the other there has been designed an anti-climbing device. This consists of pressed steel shapes placed below the nose piece, and forming a part of the detachable vestibule. The ends of the car proper are further strengthened at the side by pressed steel triangular shaped pieces with flanges at the edge. These extend to a height of about 30 in., and serve to protect the end of the car should it get a cornering blow and also to reinforce the side and end.

The illustration showing the collapsible vestibule and platform of wood construction shows an auxiliary wood end outside the steel end. This has been designed to serve as a cushion to further prevent the end of the car body from giving way in case of a wreck. This illustration shows two walls, the end of the car proper, reinforced with wood, and the wall of the vestibule, which rests directly against the car end. The shock absorbing qualities of the wood are utilized to advantage in this design. In general, the entire device is based on protecting the car bodies from damage and destruction, thereby saving the lives of the passengers.

## TRAIN ACCIDENTS IN DECEMBER.[1]

Following is a list of the most notable train accidents that occurred on railways of the United States in the month of December, 1912:

*Collisions.*

| Date. | Road. | Place. | Kind of Accident. | Kind of Train. | Kil'd. | Inj'd. |
|---|---|---|---|---|---|---|
| †3. | Penn. | Dresden, O. | rc. | P. & P. | 11 | 8 |
| 6. | West. Md. | Pen Mar Park | bc. | F. & F. | 5 | 2 |
| 15. | Balt. & O., S. W. | Lexington, Ind. | bc. | F. & F. | 2 | 0 |
| 26. | Lehigh Valley | Lehigh Gap | rc. | F. & F. | 1 | 0 |

*Derailments.*

| Date. | Road. | Place | Cause of Derailm't. | Kind of Train. | Kil'd. | Inj'd. |
|---|---|---|---|---|---|---|
| 1. | Cin., H. & Dayton | Hamilton | boiler | F. | 1 | 1 |
| 1. | New York Cent. | Hoffman's | journal | P. | 0 | 1 |
| 6. | Lehigh Valley | Jenkins Junc. | acc. obst. | F. | 1 | 0 |
| 11. | C., C., C. & St. L. | Sanford, Ind. | d. switch | P. | 1 | 32 |
| 12. | Balt. & Ohio | Glencoe | runaway | F. | 0 | 6 |
| 24. | Central Ga. | Americus | d. track. | P. | 0 | 25 |
| 24. | St. Louis I. M. | Hot Springs | exc. speed | P. | 0 | 16 |
| 30. | St. Louis & S. F. | Memphis | b. rail | P. | 0 | 28 |

As a result of the collision near Dresden, Ohio, on the 3d, nine passengers and two employees died, and three employees and five passengers were injured. This accident was reported in the *Railway Age Gazette* of December 6. The cause of the collision was failure of the flagman to get back a sufficient distance to stop the second train.

The trains in collision at Pen Mar Park, Pa., on the 6th, were a train of empty passenger cars eastbound and a freight train westbound. Both engines and many cars were wrecked. Four trainmen and a trespasser were killed and two trainmen were injured. The cause of the collision was improper handling of train orders on the part of the train despatcher and two conductors.

[1]Abbreviations and marks used in Accident List:

rc, Rear collision——bc, Butting collision——xc, Other collisions——b, Broken——d, Defective——unf, Unforeseen obstruction——unx, Unexplained——derail, Open derailing switch——ms, Misplaced switch——acc. obst., Accidental obstruction—malice, Malicious obstruction of track, etc. ——boiler, Explosion of locomotive on road——fire, Cars burned while running——P. or Pass., Passenger train——F. or Ft., Freight train (including empty engines, work trains, etc.)——Asterisk, Wreck wholly or partly destroyed by fire——Dagger, One or more passengers killed.

The freight trains in collision at Lexington, Ind., on the night of the 15th, were No. 99 and No. 94 of the C. C. C. & St. L., which company uses the B. & O. S. W. tracks at this point. Both engines were damaged and two tramps were killed. The trains were to meet at Lexington. The collision was due to No. 94 coming in at uncontrollable speed, the "air failing to hold."

The trains in collision at Lehigh Gap, Pa., on the morning of the 26th were eastbound freights. One brakeman was killed. Four cars took fire and were burnt up. The collision was due to excessive speed under a caution signal, the train passing a home signal set against it.

In the derailment of a double headed freight train by a boiler explosion, near Hamilton, Ohio, on the night of the 1st, the engineman was killed and the fireman was injured. The explosion of the boiler of the second engine threw the leading engine and cars of the train off the track and 12 of these cars were wrecked. The cause of the explosion was low water.

The train derailed at Hoffman's, N. Y., on the 1st, was westbound passenger No. 45, running at full speed. Of the 200 passengers on the train, nearly all were shaken, but the cook of the dining car is the only person reported injured. The cause of the derailment was the breaking of a journal of the rear truck of the tender, and it is said that the train ran about a mile after the truck had dropped so as to drag on the rails, being finally thrown off at a switch.

The train derailed at Jenkins Junction, Pa., on the morning of the 6th, was a westbound freight, and the engine was overturned. The cause of the derailment was a car from an eastbound train which had jumped the track and fouled the westbound line. The engineman was killed.

In the derailment of a passenger train at Sanford, Ind., on the 11th, three employees were injured, one fatally, and 30 passengers were injured, none severely. The cause of the derailment was a switch out of adjustment; but it was protected by an automatic block signal, which signal was disregarded.

The train derailed near Glencoe, Pa., on the morning of the 12th, was a heavy freight descending a steep grade. The train consisted of two engines and 42 cars of coal, and the derailment was due to the train becoming uncontrollable; and one of the engines was overturned at a curve. Six trainmen were injured, two of them fatally.

The train derailed near Americus, Ga., on the 24th, was westbound passenger No. 9, known as the Seminole Limited. Four passenger cars left the track, but none of them was overturned. Twenty-four passengers and one trainman were injured. The cause of the derailment was irregular track, following very heavy rains.

In the derailment of a passenger train near Hot Springs, Ark., on the 24th, the engine and five cars were overturned. Fifteen passengers and one trainman were injured. The cause of the derailment is believed to have been excessive speed on a six-degree curve, combined with a tender truck which was too rigid.

The derailment near Memphis, Tenn., on the 30th, was due to a broken rail. One passenger car fell into a river; 28 passengers were injured.

*Electric Car Accidents.*—Of the accidents reported in the newspapers as occurring on electric railroads in the United States in the month of December, only two appear to have been attended with fatal results. At Ashtabula, Ohio, on the 10th, a street car was struck by a freight train on a crossing and eight passengers were killed. On the 28th, at Cincinnati, a street car was derailed on the Central bridge over the Ohio river and fell 40 ft. to the ground below. Nine persons were injured, two probably fatally. On the same day near Annapolis, Md., on the Washington, Baltimore & Annapolis, a collision between a passenger car and a freight train wrecked the passenger car; and five men were injured, all of them were trainmen.

# FREIGHT CAR TACTICS OR REGULATIONS.*

**"There Is No One Freight Car Question; There Are At Least Sixteen." Tactics Are Needed to Govern Rather Than Rules.**

By Arthur Hale.

I have selected the title of Freight Car Tactics not from its military significance, but because tactics are usually broader than rules and are planned to meet variable conditions; they are employed with a good deal of discretion. The point I want to make is that in handling freight cars, especially between railway systems, you are handling them under varying conditions, and the people who handle them ought to have more or less discretion. Or, what would be better, the rules must be made in such a varied way that they will work properly under varied conditions. I have here a list of sixteen such conditions. There are a great many more under which freight cars may be interchanged between railways, and under which they may not be interchanged, when possibly they ought to be interchanged.

The first great variation is in the situation of a freight car on what is called an originating railroad and its situation on a distributing road—the difference between the delivery of a loaded car by an originating railroad to a distributing road, and the return of the empty car from the distributing road to the originating road. This is probably the most striking variation, but it is not the only one of importance. The situation is entirely different today, when there is a car shortage, from the situation six months ago, when there was a car surplus. So far there are two pairs of situations: the situation on the originating road and on the distributing road; the situation in period of car surplus and a car shortage; and that makes four combinations. There is also a difference when a car is on a railway that is well equipped and in good condition from the situation when it is on a railroad in a state of congestion. There are two more situations. Multiply them and you have eight.

And there is, furthermore, a difference of condition with a freight car which is what has been called a legal-tender car—a car like a box car, which is good for a load anywhere in the country—and a car of special design, such as a refrigerator car which is no special good unless you want to ship something which is to be protected from heat or from cold. It is no good to have refrigeration in a car if you are going to ship hay in it or merchandise. Sometimes it is rather bad to have the refrigerating arrangements in. Between the special car on the one side and the legal-tender car on the other, the most important difference is that out of the legal-tender car we expect to get 80 per cent. or 90 per cent. of loaded mileage, whereas out of the special car we expect to get little more than 50 per cent. The coal car is usually returned empty. The legal-tender car is one that can be loaded almost anywhere and which is now running a large percentage of its mileage under load—a situation which we want to preserve in this country. If you admit those as two more we have sixteen general situations to be considered. There are a lot more. But the point is that there is no one freight-car question. There are at least sixteen and probably more. Any set of rules that governs such a variety of questions is or should be more a set of tactics than a set of laws.

One great difficulty about these car questions is that when two railway men get talking about it, one may be talking about one question and the other about another. When a railway man thinks of the car question today he very probably thinks of the special cars which he wants to load tomorrow, and he thinks that the rules ought to be framed so as to take him out of his present difficulty. Take the officer of an originating railway, of a railway that originates more freight than it receives—supposing it to be a coal railway, and most coal railways are originating railways—you will find that he is thinking about his coal cars and in discussing the car question will feel that the important thing is that his coal cars be returned to him promptly in a period of car shortage. That is about the only phase of the car question he considers, and he will be for a set of rules that will secure that, without thinking at all of the box car, of the time of car surplus, or of the question whether railways may or may not be congested. So that one present difficulty and one past difficulty in our trying to make rules or tactics to cover this car question has been that we have been dealing with a lot of men who have been looking at the subject from varying points of view.

Let me insist a little on this division of railways, between originating and distributing roads. Of course every railway originates some freight and every railway distributes some freight to the consignees on its line. But very few railways receive exactly as much as they deliver. And railways will line up on this car question quite broadly, as originating railways who are always loading a majority of cars away, and distributing railways, to whom a majority of loaded cars are coming. The problem as between two such roads, today, if there were no other problem, would be very simple. You would only have to make a rule which would put a proper incentive on the return of the empty car from the distributing road to the originating road. And that is about all that they have done in Europe, for instance. They have been so successful in putting on very stiff penalties to secure the immediate return of an empty car from the distributing road to the originating road, that they have succeeded in getting the empty mileage of their cars in interchange up to 50 per cent. That is to say, they do not do much to load their cars back because the penalty is so very high against loading them wrong.

That penalty is a continuous penalty. In England, for instance, suppose I am loading my car to your road. It goes 100 miles on your road. You are allowed three or four days for that movement and pay a mileage for it. After the three or four days that are allowed, you pay three shillings a day—that is, 75 cents a day for a car that will hold but 10 tons. You pay that 75 cents a day until the car comes back to my lines, no matter what happens to it. If you use it in your own business it is three shillings a day. If you divert it to another road it is three shillings a day. The penalty is so severe that the English railways never think of loading a car back unless they happen to have a load at the particular station at which it is unloaded. They do not have any freight car tactics. They have freight car laws, and the cars come back. But, I believe they have a great many more cars than they ought to have and a great many more cars in proportion than we have.

I agree that in times of car shortage the English practice is not so bad, but in times of car surplus there is not so much difference between an originating and a distributing road. When there is a surplus of cars the empties come back and there are plenty of cars everywhere. But the minute there begins a shortage of cars then the distributing road which is accustomed to filling all the orders of all its consignees always keeps on doing so and uses the foreign cars with which to fill those orders. That means that the proportion of cars on the distributing road increases, and it holds more than a hundred per cent. of the number of cars it owns. Of course, there is the same increase in orders for cars on the originating road, but the originating road has not got so many cars because the distributing road is holding them. And the more orders there are for cars in gen-

*Mr. Hale prepared a paper on Freight Car Tactics for presentation before the Central Railway Club at its annual meeting on January 9, 1913. At that meeting, however, he departed from the printed paper in order to secure a more logical presentation, and has very kindly furnished us with the revised notes from which this article is extracted.

eral the fewer cars there are upon the originating road. That is the argument of the car owner in the condition that now prevails. That argument has been thought out and worked out into these very drastic plans that they have in England, and in France, and it has led to the very prompt return of the car and a corresponding unnecessary multiplication of equipment.

But when you turn the thing around, when you come to a period of car surplus, then you find the situation is entirely changed, because then in order to earn per diem on its car the originating road will be grievously tempted to return the foreign car empty to the distributing road and to force its own loaded cars upon the distributing road, and the distributing road cannot avoid that burden. The distributing road then is paying more per diem than it really should. And when you get to the situation which I think was reached some years ago, when railways were loading cars against each other—were returning foreign cars empty and loading their own cars—you get a doubling of empty mileage that is most unfortunate, because it is an additional expense that happens when the roads are making least money.

I will not undertake to go through all the other variations, but I will lay some stress on the situation on a road in a state of congestion. I have heard it said that when there is a car shortage the more engines you have the less cars you will have, and there is a good deal in that. Because if you have a lot of engines you are probably not congested. If you are not congested you will move your cars promptly to the delivery points; you will get rid of your cars, and the roads which are congested or which are not in as good shape as you, will not be able to return them to you. I have seen that happen on divisions of a single railroad. I have seen a division that had its power in good shape simply run out of cars while a division whose power had run down got so congested that more power had to be given it to get the cars away. The same thing happens as between railways. There are railways not so very far from Buffalo which have been congested with great and unfortunate regularity in the last few winters, and the result of the congestion has been that every road has been delivering more cars to them than it received. They seem to have used their power solely in taking cars off the interchange tracks. The amount they have been paying out in per diem for cars which have been standing around and not moving has been simply tremendous.

This variation in the car question is very much the same between the divisions of one railroad, between the stations on one division, or between the industries at one station—very much the same as it is between the railways in the United States. The man in charge of the distribution of cars on a large railway has to take all these variations into account. He considers whether there is a car shortage or a car surplus; he considers whether his divisions are congested or not; he considers which of his divisions are originating and which are distributing, and he considers whether the particular cars are cars which should go back empty or cars which should be loaded back. The man in charge of distribution on the large railroad takes all these things into consideration every day and issues orders every day or every hour to get the best possible results out of his cars. If you should ask him to write down the rules under which all those cars will move he would be at a considerable disadvantage. He would say: "Why, I want a little time for that. I should want to look over my correspondence and see what I have done." He has many of his rules in his head; he has some of them written down; where they are general they are written down, but a great many of them are not general. You cannot get the best use out of your equipment on a railroad by putting it all down on paper and telling your men to follow general instructions. You have to follow it up. You have to have reports, in the first place, to know the situation. You cannot step into an office and distribute cars unless you have got a hundred men all over the road telling you where the cars are. That is the first thing you have got to have. And when you do get the reports, while you have as many general instructions out as you can, yet there has got to be something different done every day to keep the cars moving properly. It is just the same on a division with a car distributor. He depends largely on his reports; he has some general instructions out, but he has to send out a great many individual instructions to get anything like good movement out of his cars.

Now what is the moving power on the railways we have been discussing? What is the moving power really that pushes through those orders and gets results? It is discipline. The only reason why the superintendent of a division is able to get empty cars moved from the place where they are not needed to the place where they are needed is the discipline of his division. People know that they have got to do what they are told, and they go ahead and do it without asking questions or they know the reason why. It is the same with a large railway. The general superintendent or the general superintendent of transportation orders so many empties from one division to another, and they go or he knows the reason why. Here we have on these railways this variable situation met in a variable way and backed up by discipline and with results.

Now you come to the arrangements between the railways. It is just as important that the cars be properly distributed between the railways as it is between divisions on a railway. It is more important from some points of view. But there is no possibility of such a thing as discipline—and you come to the American Railway Association, you come to our committees and you say, "Gentlemen, please make us some rules under which these cars will be properly distributed between the railways." Now don't you think that is a little hard? We have found it very hard and we have not been very successful. But we have done some things, we are going to do more, and I hope we shall be able to do the right thing. If we do not, why, the Interstate Commerce Commission probably will, or they will try to.

The first thing that we did was to get away from charging cars. We used to do that a long time ago. And that was rather worse than nothing, for this reason: that it was a direct penalty on the return of the empty car. In the old days before 1902, when mileage was paid on cars you could hold an empty foreign car on your siding for an indefinite period and did not have to pay anything. But the minute you moved it a hundred miles toward home you had to give the owner 60 cents. Now, why should you fine yourself for returning an empty car? And a great many people did not do it. But we got hold of that question and after a number of failures the per-diem system went into effect. In 1902 we began to charge the munificent sum of 20 cents a day for the use of cars. That, of course, was not enough. It was gradually increased. It went into effect just after a period of car shortage. You never can do anything in this matter, however, until you have a period of car shortage. And there was such a period in 1901 and 1902 which enabled us to get the per-diem rules through. That gave us 20 cents a day, gradually increased until we came to the great car shortage of 1906, and then the rate was pushed up to 50 cents. At the time there was an investigation by the Interstate Commerce Commission and that investigation waked up a good many railroad men, as well as others, who had not thought much about the question. The rate was put up to 50 cents, although after the panic of 1907 it was thought advisable to drop it. There was that recognition by the railways of the difference of situations between a car shortage and a car surplus, a recognition which has not always obtained since then, but which I think will be finally recognized.

During that big car shortage we did get the rate up. But more than that we initiated the series of reports which are necessary for the carrying out of any set of rules that approach tactics. It was in 1907 and under the pressure of that great car shortage that the American Railway Association started the reports of car shortages and car surpluses which have been in effect ever since. We have finished out the sixth year. It also initiated the monthly bulletins which give the performance of the cars, which show for each railway the number of miles the car

is run, the number of ton-miles the car is carried, the number of dollars the car has earned per day, and they further show—and this is possibly of more importance—they show which railways are using more cars than they own and which railways are using less cars than they own. If a railway shows that it has on its line only 80 per cent. of the cars that it owns, as certain originating roads do nowadays, that railway ought to be helped; and if a railway shows that it is using, say 20 per cent. more cars than it owns, that is a railway that ought to do something or perhaps ought to be helped, but in a different way from the road which has lost the use of its cars.

Those reports have been published regularly and form about the only information we have on the subject. They have been supplemented in the last month by a semi-monthly location sheet or car-balance sheet which is made by every railway to the Interstate Commerce Commission and of which a copy is sent to the American Railway Association as well. These reports do not seem like much, but I think they have had a good effect. It is true we have had a serious car shortage this last fall, but I think it would have been a great deal worse if we had not had every two weeks the figures showing what the car shortages were, and if the railways had not been able by looking at these figures to see that a car shortage was infallibly coming. The railways ordered a good many cars this last year, something over 212,000. I do not think they would have ordered them if it had not been that the reports of the American Railway Association were showing week by week that the surplus of cars was dropping down and the shortages were beginning earlier than usual. Of course, it may be that they ordered more cars and not enough locomotives. That is another question. But they certainly ordered more cars and before they really felt the grip of the car shortage.

The railways have done one other thing, and this is in the direction of the tactics of which I spoke. They have appointed what is known as the Commission on Car Service. It is formed of three members of the executive committee of the American Railway Association, and to that commission any railway can go and say, "another railway has injured me by detaining my cars and by misusing my cars, and I wish my wrong righted." The commission has the power of fining the railways at fault an unlimited amount. In fact, the only limit made is a minimum rate of $2.00 per misuse. That commission has been in existence for only about two months, but four railways have appeared before it and those four railways have made forty-seven different complaints. It was quite in the power of the commission to examine the records of the railways at fault and assign summary punishment to them, but it has not done that as yet. It has tried to handle matters in a broad way and rectify the situation rather than handle the matter technically. The first thing the commission noticed was that every one of these complaints was in regard to coal cars. There was not one complaint as to box cars. The commission has managed to get certain coal cars home, by its own individual efforts, but the first general and the first important result of the work of the commission was the signing in Chicago, by the presidents of the Chicago roads, of what we call the Chicago declaration, under which the Chicago roads have agreed to give a preference to the handling of empty coal cars. It was a recognition by the Chicago roads that they had a public duty before them: it was their duty to see that the coal mines were kept running and that there would be plenty of coal this year. The coal mines have been kept running and there is plenty of coal. That was done within a couple of weeks after the first case was brought to the commission and after the commission had had a chance to look into the matter in a broad way. That had such a good effect in the vicinity of Chicago; it had such a good effect on the coal lines of Indiana and Illinois that the commission has now asked the presidents of all the railways in the United States to sign a similar declaration, with the idea of meeting the first want, which is a prompt handling of the cars which can carry coal. The presidents are very generally signing the declaration. The record of the commission so far has not been the record of a judge; it has not assessed all the penalties it could; its record is the record of an administrator. Or, if I can come back to the subject of my talk, the record of a tactician. It has been taking a particular case and has been applying a particular remedy.

I hope people will remember that the car question is not one question but a great many questions; that its answer is not one answer but there are a great many answers to be given to the separate questions; and I hope people will realize that in the handling of cars, even between railways, we need more than a set of cold rules, laws and penalties; we need possibly strategy —but that seems a large word. I feel we need a certain amount of tactics.

## WEIGHING METHODS ON THE ST. LOUIS & SAN FRANCISCO.

E. D. Levy, assistant general manager of the St. Louis & San Francisco, was one of the railway witnesses at a hearing before the Interstate Commerce Commission at New Orleans on December 17, in its general investigation of methods and practices in the weighing of carload freight. The following abstract from Mr. Levy's statement to the commission contains an interesting description of some of the methods employed by the St. Louis & San Francisco in the effort to obtain the greatest possible accuracy in the weighing of freight, as well as similar views of a practical railway official on deficiencies in the present weighing practices.

Our standard track scale is a 50-ft., four section, extra heavy pattern, 150-ton scale with type registering beam. We have 16 of these in actual operation—all installed during the year 1911. We expect to install six more of these during the year (1912). Our scale pits are being constructed with waterproof membrane. The decks are supported by ties and are also water and dust proof. The live rails are supported by cast stands, which rest on steel construction. This overcomes the trouble of water and dirt on the platform changing the balance of the scale. We have a total of 66 track scales on the Frisco as follows:

| | | |
|---|---|---|
| 19— | 150-ton | 50 ft. |
| 1— | 80-ton | 44 ft. |
| 1— | 82-ton | 42 ft. |
| 41— | 80-ton | 40 ft. |
| 2— | 80-ton | 38 ft. |
| 1— | 60-ton | 40 ft. |
| 1— | 60-ton | 36 ft. |

All weighmasters are sworn under the rules of the Western Railway Weighing Association or Southern Weighing and Inspection Bureau. We have 34 weighmasters carried on association payrolls; and others are carried on our own rolls. All weighmasters are instructed to see that cars are properly spotted, cut at one end, that the beam is allowed to balance naturally, that the scale is in good working order, and that full information called for on all scale tickets is secured in all cases. This information consists of date weighed, gross, tare and net weights, the weather condition, the amount of refuse, ice in tanks, racks, blocking, dunnage, stakes, temporary fixtures, grain doors, etc., the capacity of car and signature of weighmaster.

All scales are equipped with type-registering beams and our rules provide that in all cases cars should be weighed by the weighmaster without the waybills being before him; the waybills are retained in the agent's office, or in the yard office. The cars are placed on the scales and the weighmaster registers a ticket in the type-registering beam, and sends it to the yard office where it is applied to the waybill, or if it is a check weight, and confirms the weight as provided in our tariff, it is filed. By using the type-registering manifold scale tickets and type-registering beams errors in transposing figures are eliminated, also errors in reading beams.

Our tariffs provide that all cars originating on this line, or

received from connections, which do not bear authorized weighing association track scale stamp, or agreement of such association, should be track scaled en route, and at certain places, namely, St. Louis, Kansas City, Harvard, Chaffee, Ft. Smith, Yale, Springfield, Hugo and Jasper. We check weigh shipments of lumber to check against our track scale weights at other points, and track scale weights of other roads, and at certain other points we check weigh shipments of coal for special reasons. Where the difference between the first track scale weight and the second track scale weight does not exceed 1,000 lbs., the weight is not changed and the waybill is indorsed with a rubber stamp reading, "Check weighed OK."

A report of every car check weighed is made to my office, where we maintain a weighing bureau, consisting of a chief, two clerks and a force of four traveling scale inspectors having tool cars; they have, in addition, steel test cars, two weighing about 45,000 lbs., and two weighing 70,000 lbs., and having a wheel base of slightly less than 10 ft., so they can test each section of our modern four section track scales. The bureau in my office checks the weight differences obtained on our track scales, makes an investigation, and very often is able to locate the error, and in that way cause our weighing service to be maintained at a high standard. The weighing or any other branch of the service that is not supervised and checked will soon deteriorate.

The force of scale inspectors is kept constantly busy inspecting and testing scales and supervising the installation of new scales. We test our scales with our own inspectors on an average of once in sixty days, and the weighing bureau checks to see that all scales are given periodical inspection. When the inspectors make a test of a scale they send in a report on a prescribed form, and all matters requiring attention are given prompt handling. Superficial inspection is given the scales each morning when the weighmaster comes on duty—he sees that the platform is swept off, and that it is free from bind, and that the scale beam is in proper balance.

As a remedy to improve present conditions we suggest that shippers of all commodities be required to show on bills of lading or shipping tickets the actual or estimated weight of commodity to be shipped, and if estimated the basis for the estimate shown on face of bill of lading or dray ticket; in case of lumber, whether dry, half dry or green, and the estimated weight per foot, age and dimensions. The railroad should then weigh the freight at the first track scale and if the weight comes within the variation of tolerance prescribed, then the weight given by the shipper should be accepted.

In check weighing carload shipments, we make no correction when the weights agree within 1,000 lbs. If in weighing, it is found there is a variation of more than 1,000 lbs., or whatever variation is prescribed, the shipment should be again weighed on the scales carefully, and the scales carefully balanced, and if the shipment passes another scale en route it should be billed to be weighed on that scale. If a second weight confirms the shipper's weight it should be allowed to stand. If it confirms the first track scale weight it should stand.

In the event of a variation between shipper's weight and railroad weight, the agent should be charged with the duty of convincing the consignee of the actual weight, if the consignee is not willing to accept railroad weight before the property leaves his possession. In other words, hold an ante-mortem investigation instead of a post-mortem investigation. Under present practices when an overcharge claim is received on lumber, for instance, the lumber is out of existence, it is the part of some building or may be in the roof or sides of box cars; the car in which the shipment was transported may be thousands of miles away. There is no chance to prove the weight of lumber or correctness of the tare weight of the car. If the car is located, the tare produced would not conclusively prove the tare weight a year ago, especially in cases where the amount of overcharge was not great. Under this plan agents could secure from the superintendent authority to bill car empty to the first track scale for light weight if there is no scale at destination. Under the plan proposed the agent would have a number of ways of arriving at the actual weight. He could call upon the consignee to produec his invoice; he could call upon disinterested lumbermen to pass upon the degree of dryness, and in extreme cases he could go so far as to measure part of the lumber and find out how much it weighed per foot. At points where association inspectors are located they could be called upon to do this. Agents should be authorized to determine and agree with consignee upon actual weight, in the same manner as we now require our agents to handle claims for visible loss and damage, i. e., either deliver the freight in good order and secure receipt, or arrive at the correct amount of damage and pay the consignees in full settlement of claim. This has been found more satisfactory than the post mortem settlements. Under this plan if the railroad weights are sustained the consignee must pay all expense, including demurrage if any; if the shipper's weight is sustained the railroad pays it.

We firmly believe that track scales and other scales used by railroads and shippers for determining the weight of freight carried in interstate commerce will never be the proper machinery for producing those weights until the Interstate Commerce Commission or some other competent governmental authority assumes a direct supervision over them. As far as this railroad is concerned, and I believe the same applies to all other railroads, we do not want to assess freight charges on any more freight than is actually transported, but we do want to assess charges on every pound that is transported; the great majority of shippers and receivers of freight, want to pay lawful charges on every pound of freight shipped, but no more.

There are two sides to the weighing proposition; one is the weighing machinery and the other the human agency performing the weighing. There are also two sides to the complaints on the weights of freight transported by the carriers; one is the overcharge against shippers, and the other is the undercharges for which the carriers suffer. If a railroad clerk or weighmaster produces a weight in excess of the actual weight he does not personally profit, but if a shipper or receiver of freight can return an incorrect weight less than the actual amount transported he profits individually. I know the large majority of shippers and receivers of freight are honest, but in the administration of weights we find that the dishonest man is as much a factor we have to contend with as the incorrect weighing machinery and careless weighmasters.

We also find that shippers have inferior weighing machinery and through ignorance think that it is correct. This same thing might be said of some railroads, all of which leads back to the theory that we will not have correct weights until the Interstate Commerce Commission, or some other competent governmental authority, assumes jurisdiction not only over weighing machinery, but over the people who perform the weighing.

We feel that it is not only desirable, but necessary that the commission should prescribe certain standards with reference to scales, specify certain foundation construction, weight of the different parts of track scales, also wagon scales, hopper and platform scales; that the commission should have a force of competent inspectors to see, after promulgating their specifications and rules, that they are complied with, and should order out of commission those scales not meeting the specifications and not competent to produce good results. Such a course might cause this railroad, and a number of others, to spend a large sum of money to bring the weighing machinery up to proper standard. If that be true, then we should spend the money and would do it. As a matter of fact there would be no loss to the carrier, because experience has demonstrated that where we put in modern track scales our weights are so superior that in a short time the cost of the scale is paid for.

There are a great many inferior scales on the market. The

scale manufacturers will sell the purchaser any kind of a scale he wants. They will sell a good scale if the purchaser is willing to pay for it; if not, they will sell him one that will "fit his pocketbook." These scales are often badly installed, the method of installation may absolutely prevent a scale from giving satisfactory service. There is no one to inspect and pass on these scales at the present time.

## POSTAL CAR LIGHTING.

The specification for the lighting of full postal cars, as approved by the postmaster-general, has been issued by the Special Committee on Relations of Railway Operation to Legislation in bulletin No. 44, with an explanation of the various points considered. The lighting system is to be either electricity or gas with provision for emergency lighting, as specified later. The fixtures, wiring, equipment, etc., are to be according to the railway's standard practice. Each electrically lighted car equipped for axle generator or head-end system of lighting shall be equipped with storage battery of sufficient capacity to furnish for 12 hours the intensity of illumination specified hereinafter without any charging whatever of the battery during this period. Each car using gas or straight storage electricity as the primary system of lighting shall be equipped with storage capacity sufficient to furnish light for 36 hours at the intensity of the illumination specified hereinafter.

*Location of Light Units.*—The light units for illuminating the bag rack and storage portions of the car shall be located on the center line of the postal apartment. Direct lighting units shall be located at such uniform height that the shadow of the paper boxes is not cast on any bag rack label, nor higher than approximately 3 in. above the back rod of rack. In no case shall any light unit (except oil lamps, the lowest point of which may be 6 ft. 9 in. from the floor) be mounted at a height of less than 7 ft., measured from the floor to the lowest point of the light unit (spacing between adjacent units in the bag rack portion of the car shall not exceed 8 ft. 6 in. in case of any direct system of lighting, nor 14 ft. in case of any indirect system).

Light units for illumination of the letter cases shall be mounted at the same height from the floor as the units in the body of the car, and as far from the front of the face of the letter case as possible, without the body of the distributor throwing any shadow on his work. In standard construction, where the letter case table is 17 in. wide, the above distance is 20 in. Where the car construction does not permit the above distance to be employed, a lesser distance, but not less than 16 in. may be employed. Separation between adjacent letter case units shall be such as to provide an illumination intensity at all points within the requirements hereinafter specified.

If an indirect lighting system be employed, the provisions of the above paragraph will be waived. In such case, the only requirements imposed for location of units of letter cases are those involved in providing for sufficient vertical and horizontal illumination intensities to meet the provisions of these specifications as hereinafter stated, all units in the car burning. For the purpose of these specifications an indirect system is here defined as any system in which at least 85 per cent. of the horizontal illumination on the 46-in. plane of utilization is received, either directly or indirectly, by reflection of the light from the deck of the car.

In the case of incandescent electric or mantle gas lamps, the design of light unit, except letter case units, shall be such that no portion of the bare lamp filament or the bare mantle is visible to the eye when the unit is observed at an angle of 70 deg. or greater from the nadir. (In general, light units are preferred which emit no light or only a small amount of light between the angles of 50 deg. and 100 deg. from the nadir.) The control of the lights in the postal apartment shall be independent of any other lights in the car, and the letter case units shall be controlled independently of any other light units in the postal apartment.

*Initial Illumination Values.*—All horizontal illumination values shall be taken on a plane 46 in. above the floor line. Vertical illumination values shall be taken on the vertical plane on the face of letter case as specified below. New lighting installations shall be such as to give initial illumination values in foot candles within the following limits:

| Location. | Minimum. | Maximum. |
|---|---|---|
| Bag-rack portion: | | |
| Center of car, horizontal | 4.70 | 10.00 |
| Mouth of bags, illumination measured 18 in. from side of car, horizontal | 2.50 | 10.00 |
| Letter cases: | | |
| Over table, horizontal | 4.70 | 16.00 |
| Face of case, vertical | 2.08 | 16.00 |
| Storage portion, not behind obstruction, horizontal, measured not less than 18 in. from side or end of car | 2.50 | 10.00 |

Illumination requirements at letter cases as above specified shall be entirely fulfilled by letter case units, other units in the car not burning; but letter case units may be considered as contributing to the specified illumination values for the body of the car.

If globes or reflectors of opal glass, rough crystal glass, prismatic glass, or aluminized metal, and those giving similar results (excluding heavy density opal with glazed reflecting surface, mirror glass, porcelain enameled metal and those giving similar results) be employed, the minimum values specified in the above table may be reduced 20 per cent. and the maximum values increased 20 per cent.

Above illumination values are based on an allowance of 40 per cent. for depreciation in service. Less efficient maintenance must be compensated for by increased initial installation.

If an indirect lighting system be employed, the minimum and maximum values in the above table may be respectively decreased and increased 40 per cent. in the bag rack and storage portions of the car, and 25 per cent. at the letter case locations specified in the above table.

*Service Illumination Values.*—While the car is in active service the lighting installation shall be maintained at all times to give illumination values (in foot-candles) not less than the following minimum values:

| Location. | Minimum. |
|---|---|
| Bag-rack portion: | |
| Center of car, horizontal | 2.80 |
| Mouth of bags, illumination measured 18 in. from side of car, horizontal | 1.50 |
| Letter cases: | |
| Over table, horizontal | 2.80 |
| Face of case, vertical | 1.25 |
| Storage portion, not behind obstructions, horizontal, measured not less than 18 in. from sides or ends of car | 1.50 |

Illumination requirements at letter cases as above specified shall be entirely fulfilled by letter case units, other units in the car not burning; but letter case units may be considered as contributing to the specified illumination values for the body of the car.

If globes or reflectors of opal glass, rough crystal glass, prismatic glass, aluminized metal, and those giving similar results (excluding heavy density opal with glazed reflecting surface, mirrored glass, porcelain enameled metal, and those giving similar results) be employed, the minimum values specified in the above table may be reduced 20 per cent.

If an indirect lighting system be employed the minimum values in the above table may be decreased 40 per cent. in the bag rack and storage portions of the car, and 25 per cent. at the letter case locations specified in the above table.

A light failure is defined as the condition where for a period exceeding 30 minutes the primary lighting system fails to give sufficient illumination to permit distribution of mail matter to be continued. It will be considered that whenever the lamp

voltage falls below 80 per cent. of the normal operating lamp voltage such a condition of light failure has been reached.

A car movement is defined as the use of a postal car by a crew of postal clerks over the length of their run in one direction. Where a car covers more than the run of one crew, each separate run shall be considered a car movement.

The percentage of failure of the lighting system is defined as the ratio of the total number of failures to the total number of car movements of each primary system of lighting (gas and electrically lighted cars to be considered separately) on each railway system. The determination of percentage of failure shall be based on the operating performance of each car for the preceding twelve months period. Only such failures as are promptly reported by the railway mail service to the operating railroad shall be considered in computing the percentage of failure.

*Emergency Lighting.*—If the percentage of failure of the primary system of electric or gas lighting does not exceed 1 per cent., candle lamps will be accepted as a suitable emergency light. If the percentage of failure of the primary system of gas or electric lighting exceeds 1 per cent. and is not greater than 4 per cent., an emergency system of suitable oil lamps, gas or electric lights, maintained by independent storage capacity, may be required. Such emergency system must provide illumination values not less than 50 per cent. of the minimum operating illumination values specified above for the primary system, with the exception of letter cases and center line of car through bag rack portion where the illumination shall not be less than 60 per cent. If the percentage of failure of the primary system of electric or gas lighting exceeds 4 per cent., a new installation or a second complete primary system of lighting will be required on cars so failing.

## ANNUAL REPORT OF THE NEW YORK PUBLIC SERVICE COMMISSION, SECOND DISTRICT.

The sixth annual report of the New York State Public Service Commission, Second district, shows 924 corporations, municipalities, and individuals engaged in serving the public in some capacity, under the jurisdiction of the commission. Of these, 183 are steam railroad corporations, 125 are street railroad corporations, 7 express companies, 1 sleeping car company, 301 electrical corporations, 73 manufactured gas corporations, 58 natural gas corporations, 29 acetylene gas corporations, 18 gasolene gas corporations, 126 telephone corporations, and 8 telegraph and cable companies. The steam railroads have 8,458 miles of main line and the electric railroads have 1,909 miles. The total capitalization of the corporations under the jurisdiction of the commission is $4,822,222,727.

During the year 1912 the commission handled 2,853 applications and complaints, being the greatest number for any year since it came into existence. In 1908 there were 1,606, and in 1911 there were 2,321. The commission devoted 288 days to public hearings, during which days 504 separate hearings were given. During the year the commission authorized the issuance of stocks to the amount of $30,602,055, and bonds to the amount of $96,817,446: a total of $127,419,505. Every mile of steam railroad track in the state has been personally inspected by representatives of the commission, the total main line, sidings and yards equalling 17,816 miles of track. The inspections made last year indicate a higher plane of maintenance than has existed heretofore in the history of the state. The development of new and better appliances which are being adopted not only by the larger railroads, but by the smaller ones when renewals become necessary, is adding safety and facility to transportation.

The rail situation indicates steady improvement with respect to weight. The use of treated ties with tie plates and screw spikes is rapidly increasing on many of the principal roads. The extension of the automatic signal system has been continued on the New York Central, the Buffalo, Rochester & Pittsburgh and on branches of the Delaware, Lackawanna & Western.

No railroad fires of any importance in the forest preserve have been caused by locomotives since the order of the commission of April 1, 1909, requiring oil-burning engines.

The commission has made extensive investigations into street railway service in the cities of Buffalo, Rochester, Yonkers and Newburgh, and important and substantial improvements are to follow each of these investigations.

The commission recommends to the legislature the re-passage of the law vetoed by the governor last year without specific reasons therefor, empowering the commission to suspend increases in railroad rates pending investigation as to the reasonableness of such advances. The commission feels that the best time to investigate increases in rates is when the increases are proposed to be made. The best time for the carrier to justify increases is when the reasons or causes underlying the action are fresh in the minds of railway officers.

Recommendation is made that the Public Service Commission's Law be amended, authorizing the commission to protect shippers in cases where the agent of a railroad quotes an erroneous rate. In such cases the carrier should be liable to a forfeiture of $250 to the state. The forfeiture provision is held to be necessary to prevent future lax methods.

Attention is also called to the fact that it is possible for telephone corporations to organize with a property value less than $10,000 and begin business without any reference to the commission, thereby defeating one of the real purposes of the supervision of telephone corporations. Further, no means is provided for ascertaining whether or not a certain corporation was originally within the jurisdiction of the commission or whether since its formation, in the natural process of its development, it has grown so as to have an investment in the business in excess of $10,000.

VICTORIAN GOVERNMENT RAILWAYS.—The lines owned and operated by the state of Victoria, Australia, includes 3,622 miles of steam railway, all of 5 ft. 3 in. gage, except 122 miles of 2 ft. 6 in. gage, and an electric line 5¼ miles in length. The railway also operates the state coal mines at Wonthaggi, producing about 200,000 tons of coal per year. The gross revenue of the railway in the fiscal year ended June 30, 1911, amounted to $23,827,406, while the working expenses were $14,558,977, leaving a net revenue of $9,268,429, or 4.31 per cent. on a capital account of $215,005,737.

WESTERN AUSTRALIA RAILWAYS.—The Western Australia Government Railways have cost about $60,000,000 and extend to about 2,300 miles. The first line was commenced in 1871 by a private company, and was followed by a line to the north of the settled districts from Geraldton to the copper districts of Northampton. Construction has since proceeded rapidly, the main feature of the northern system being an inland line from that port. The goldfield line from Fremantle through Perth to Laverton, and a southern line from Northam near Perth on the latter line to Albany, was subsequently made, and all the southwest corner of the state has now been fairly filled up with a network of lines. The cost has been about $26,425 per mile, the country generally being easy. The gage is 3 ft. 6 in. The chief difficulties encountered have been in connection with the water supply. There were, at the date of the last report, over 350 miles under construction, including an isolated line in the north of the state, 114 miles long, from Port Hedland to Marble Barr. There are 507 miles of new lines authorized. The Midland Railway, 277 miles long, connecting the northern and southern systems, is owned by a private company. The Western Australian railways are at present entirely isolated from all the other Australian systems.

# Maintenance of Way Section.

THE protest raised by Dr. Von Schrenck in his paper before the Wood Preservers' Association against the improper treatment of timber under the stress of urgent requirements, or at the direction of the party for whom the work is being done, may well be given serious consideration. While directed primarily at the conditions existing at plants doing work by contract, it also applies to those plants owned and operated directly by the railways. Those in charge of these plants owe it to their clients or employers to fully explain the injurious effects which will follow a deviation from the best accepted practice and to discourage this wherever possible, for the premature removal of such ties from the track will be remembered and charged against the plant long after the special instructions have been forgotten.

THE ninth annual convention of the American Wood Preservers' Association, held this week in Chicago, reflected the exceedingly promising condition of the association and its remarkable growth during the last two years. It was organized at St. Louis in 1904, when 24 men met at the Transportation building on the World's Fair grounds and perfected plans for a permanent organization. The first regular meeting was held at St. Charles hotel, New Orleans, on January 17, 1905. Following this the annual meetings were held in Chicago, in 1906; Memphis, Tenn., in 1907; Kansas City, Mo., in 1908, and at Chicago annually since that time. The membership list has grown to a total of 157, a net gain of 53, or over 50 per cent. more than that of last year. Twenty-nine railways are now represented by 45 members, the rest of the membership representing commercial treating plants, lumber companies and other manufacturing concerns. This membership is scattered over 29 states and four foreign countries. As the larger portion of the treated timber is consumed by the railways, the importance of this rapidly growing association to the railways can be readily realized.

THE severe climatic conditions encountered in most parts of the country at this season of the year introduce a special class of problems affecting nearly all branches of construction and maintenance of way work. The next contest will be on "Winter Methods" and will relate to the handling of these special problems. Contributions describing methods, new or not generally in use, for overcoming any of the many difficulties encountered in the prosecution of construction or repair work, or in the routine maintenance work of keeping the tracks, water stations and other facilities in service, will be eligible. The unusually severe conditions encountered last winter are still fresh in the minds of all and the methods used then, as well as those developed this winter, will be of interest if they depart from common practice. Prizes of $25 and $15 will be paid for the first and second best papers received, while all others accepted and published will be paid for at our space rates. All contributions should be sent to the Civil Engineering Editor of the *Railway Age Gazette,* Transportation building, Chicago, and must be received by February 25.

THE judges of the contest on "The Storing and Handling of Maintenance of Way Material," who were H. M. Eicholtz, division superintendent, Chicago & North Western; A. F. Blaess, assistant engineer maintenance of way, Illinois Central, and C. G. Delo, engineer maintenance of way, Chicago Great Western, awarded the first prize to A. S. Markley, master carpenter, Chicago & Eastern Illinois, Danville, Ill., and the second prize to E. K. Coggins, chief clerk to roadmaster, Southern, Knoxville, Tenn. Five other papers were received from A. Palm, roadmaster, Central California Traction Company, Sacramento, Cal.; M. Ganley, roadmaster, Atchison, Topeka & Santa Fe, Argentine, Kan.; M. Riney, foreman bridges and buildings, Chicago & North Western, Baraboo, Wis.; R. O. Gillies, roadmaster's clerk, St. Louis & San Francisco, Ft. Scott, Kan., and Joseph J. Morgan, New York Central & Hudson River, Kingston, N. Y., all of which are published in abstract in this issue. The economical handling of material is an important one for maintenance of way officers to consider, and it is well worth their attention, as it offers opportunities for large savings or waste, depending on the way the work is performed. While more elaborate than the average modern installation, the Pittsburgh & Lake Erie storehouse at McKees Rocks, described elsewhere in this issue, is typical of the results of a careful study of this problem. The papers presented have far from exhausted the subject and we invite further contributions describing more particularly definite methods and installations, and the results which have been secured by their use.

ENGINEERS in charge of timber preservation may not all agree with Mr. Weiss in his comparison of zinc chloride and coal tar creosote for preserving cross ties, presented before the convention of the American Wood Preservers' Association this week, and abstracted elsewhere in this issue. Mr. Weiss finds six points of superiority for creosote, namely; it does not leach, it does not weaken the ties, it does not corrode the spikes, it does not cause leakage of signaling currents, its penetration can be readily tested, and it is somewhat cheaper on the basis of assumptions made in the paper as to the life of treated ties. On the other hand, he found five points in which creosote is not as desirable as zinc chloride, namely; it evaporates from the ties, it does not penetrate the wood as easily as zinc chloride, its composition is far from uniform, it is combustible and it is more difficult to handle. In the matter of toxicity the paper shows the two preservatives to be about equal. If the factors enumerated are of equal importance, there would seem to be cause for a careful study before deciding that either process is the more desirable and some question might be raised as to whether the rapid increase in the use of creosote during recent years and the lack of growth in zinc chloride treatment has resulted from such study or from other influences. The advocates of zinc treatment maintain that some of the poor showings made by zinc-treated ties in the early days of wood preservation can now be directly traced to poor timber or improper operation of the plant, rather than to any inferiority of the process. The fact that the Baltimore & Ohio is now building a new plant for treating ties with zinc chloride and that a large western road, which discarded the zinc process a few years ago, is reported to be considering its readoption, indicate that some timber treating engineers have reached the conclusion that the comparisons of the two preservatives are not all in favor of creosote.

THE specifications for Portland cement, published elsewhere in this issue, differ in several important respects from existing specifications, the most prominent of which are those adopted by the joint committee of the American Society of Civil Engineers, American Society for Testing Materials, American Institute of Architects, Engineer Department of U. S. Army, Association of Portland Cement Manufacturers, and the American Railway Engineering Association. The Lackawanna specifications are based upon an extended study, both in the field and laboratory, extending over the past two years. One conclusion reached as the result of this study was that a large part of the difficulty encountered with cement can be traced to the presence of the coarser particles. As a result, these new specifications require that 95 per cent. of the cement by weight shall pass through a number 100 sieve as compared with 92 per cent. in the specifications referred to, and 80 per cent. through a number 200 sieve instead of 75. Largely because of

this increased fineness it was possible to require a higher tensile strength. Instead of the required strength of 175 lbs. for neat cement after 24 hours, 200 lbs. is required, the other figures for neat cement remaining as in the earlier specifications. In the 1; 3 mixture the strength in the seven day test is raised from 200 to 250 lbs., and in the 28 day test from 275 to 375 lbs. Another important deviation is in the substitution of the auto clave test for the more common boiling test. The investigation showed that many samples which would pass the boiling test would not pass this auto clave test, and it is believed that the latter will reject many samples which pass the boiling test, and in that way will remove a large portion of the cement which would ultimately cause failures if placed in structures. While this test may be regarded by some manufacturers as unnecessarily severe, in view of the extent to which this road is going into this class of construction, and the size of the structures which it is building, it is better for it to reject several worthy cements than to allow one poor cement to pass. The results of the enforcement of this specification will be followed with much interest by engineers in general.

---

THE systems in general use for the handling of maintenance of way material vary so widely on the different roads that it is not to be expected that all the ideas advanced in the papers received in the contest on The Storing and Handling of Material will receive the unanimous approval of all our readers. The handling of this material is now passing through a process of development and on certain roads considerable attention is being given to a study of the comparative advantages of the different methods, for each of the systems possesses certain advantages, as well as disadvantages. The handling of material and of scrap is, however, not being given the amount of general attention which its importance would appear to justify. The extent to which the maintenance department should maintain its own storehouse and handle its stock, as compared with the handling of it directly by the store department, is a much argued question with merit on both sides. It is interesting to note that on several roads where the maintenance of way department has studied this subject carefully, the material is being handled directly by that department. This practice is, however, not in general use. The amount of emergency and reserve material to be held out along the line by the smaller gangs also varies widely, although there is a strong tendency now to reduce this to the minimum and to concentrate a moderate amount at some central point. With the train service now existing on most lines, the emergency material can thus be concentrated and greatly reduced in amount without running much chance of incurring delays. The reduction in the number of standards, especially for rail and track fastenings, is also being closely watched as another means of reducing the amount of capital tied up in reserve material. The practice of handling scrap varies widely, although the supply department in most cases handles it, sorting and classifying it for sale. On some roads the maintenance of way and mechanical departments collect and sort their own scrap, turning it over to the purchasing department for sale. The method of collecting the scrap itself is subject to some variations in practice. One reader says that it is the practice on his road to run scrap cars whenever there is a sufficient amount of material to warrant it. Other roads run their supply and scrap cars at stated times, so that those concerned may know when to expect it and can plan accordingly.

---

## THE USE OF SLOW ORDERS AND FLAGS.

NOT long ago we received a letter from a railway officer interested in fuel economy protesting vigorously against the frequent use of slow orders by maintenance forces on the ground that every time a train was forced to materially reduce speed, or to stop, it required a consumption of from 500 to 1,500 lbs. more coal than would otherwise have been required. Laudable as the agitation for fuel economy is, and much as we desire to promote this, it would seem that this criticism borders on dangerous ground. As similar remarks have been heard on other occasions, it is well to consider what they involve.

The ideal conditions are, of course, that the track shall at all times be safe for trains at full speeds. However, this condition is more to be hoped for than realized even on the best maintained roads. There are certain sources of delays which can be avoided by the expenditure of a sufficient amount of money, among which can be placed much of the bridge renewal and track improvement work. There are other causes of delays which are unavoidable with the present methods of railroading. Among these are broken rails, washouts, storms, and certain classes of bridge erection.

The problem of reducing or eliminating the delays referred to in the first class is essentially an economic one, depending on the amount of money a road is justified in spending to eliminate a certain amount of delay to traffic. On the main line of the Pennsylvania between Philadelphia and New York, the time which the maintenance forces are allowed to hold a track is limited to 12 min. In such a place the cost of doing work increases very greatly, for the time lost by a gang because of traffic conditions may far exceed that spent in working, but is justified by the very heavy traffic which must be kept moving. A careful check, made a few days ago, of the time of a gang engaged in putting in a floor system for a large bridge which was being rebuilt under traffic, showed that this gang was able to work only about 2½ hours daily. Delays such as these run into money the same as do the coal bills referred to above. These lines of heavy traffic density are, however, not typical of the conditions existing on the average railroad in this country and the frequent use of the slow order becomes economical.

From their very nature, the second class of delays, the unavoidable slow orders, are a necessity as a measure of safety to compensate for the weakening of the track structure either during alterations or repairs, or from other causes. While the number of accidents due to neglect to put out slow orders or flags where the conditions are known are small and reflect to the credit of the maintenance men as a body, their supervisors and superior officers cannot do other than insist upon the use of such precautionary measures whenever there is a possibility of accident due to weakened conditions, and these men should know that they have the support of their operating officers whenever such an order or flag is put out. While engineers will seldom intentionally run by a stop flag, on many roads they will regularly exceed the limits set on slow orders, forcing the supervisors and foremen to set these limits lower than would otherwise be necessary.

Closely associated with the use of the slow order is the use of the flag for absolute stop. This is especially important at this season of the year when broken rails are most prevalent. Many section gangs are reduced during the winter months to two or three men, and in such cases they can do little else than flag until assistance arrives, when a broken rail is discovered, or the track suddenly becomes unsafe. All foremen engaged in maintenance work must not only be impressed with the importance of flagging, but also with the sending of flags out a sufficient distance to fully protect all trains. It is only a few weeks since the engine and forward car of a fast passenger train on the main line of an important road ran off the track at a point where a broken rail was being taken out because of a "short flag." With the large and increasing proportion of foreigners employed in many of the gangs today, it becomes doubly important for the foremen to fully realize the necessity of proper flagging and their superiors can well emphasize this.

In a departmental organization it is natural that the transportation officer will be interested in the continual movement of trains without delay. He is, therefore, apt to criticise the foreman who stops or slows down trains without ascertaining all the facts in the case. He must be careful with his criticism for this censure from a superior officer may cause a foreman to take a chance the next time. It is far better to cause a delay than an accident.

# Letters to the Editor.

## LIGHT VERSUS HEAVY TREATMENT OF TIMBER.

CLEVELAND, Ohio, December 13, 1912.

TO THE EDITOR OF THE RAILWAY AGE GAZETTE:

On page 748 of your issue of October 18 there appeared an article by E. A. Sterling on "The Development and Status of the Wood Preserving Industry in America," in which he gives a summary of the various processes or treating methods now in use in this country. He divides the different kinds of treatment into three classes: high artificial pressure processes, atmospheric pressure processes and low artificial pressure processes. Each of these is again sub-divided between "full-cell" and "empty-cell." This classification is, in my opinion, incomplete and indefinite. In the first place, he omits to mention in his summary the "boiling in oil process," which is used to a considerable extent in Oregon and Washington. Again, he does not describe how "full-cell" and "empty-cell" treatment is secured or performed with "low artificial pressure processes" as he does for all the others mentioned in his schedule, nor does he make clear what he means by "high artificial pressure" and "low artificial pressure." Is it not true that the pressure in the impregnating cylinders may be anywhere from one pound to 250 pounds? Therefore, where is the distinction between the two processes?

If there is any, when and by whom was the dividing line established? In regard to the so-called "full-cell" and "empty-cell" processes, I desire to repeat here what I have often expressed, that there can be no such distinction between different treating processes. These so-called "empty-cell" processes are nothing more than "partial dose" processes, injecting only a limited quantity of creosote oil into the timber.

I would summarize the methods in use in this country at present, as follows:

ARTIFICIAL PRESSURE PROCESSES.

*Full Dose.*—Impregnation done in closed cylinders. Preservatives injected into the wood to total refusal, after the wood is put into a receptive condition by air seasoning, or boiling in steam or oil. Preservatives mostly used are creosote oil, zinc chloride, crude oil and other chemicals and solutions. Penetration and diffusion as thorough as the condition of the wood and process of treatment will admit.

*Partial Dose.*—Impregnation done in closed cylinders. Duration and amount of pressure regulated so as to inject a limited quantity of preservative into the wood, creosote being the only preservative used in this process. Penetration usually scant except in sapwood and the variation in the absorption in individual ties is very large.

ATMOSPHERIC PRESSURE PROCESSES.

*Light Dose.*—Impregnation done in open tanks. Preservative usually creosote oil, crude oil or carbolineum. Quantity absorbed depending upon the temperature and nature of the solution, character and condition of the wood. Treatment only superficial.

The Lowry and Rueping processes come within the category of "partial dose" artificial pressure processes.

Mr. Sterling states that the present tendencies are towards lighter impregnation with creosote and that no less than 16 plants use a light impregnation creosote process. While not specifically so stated, the impression left on my mind after reading this article, and I think on that of most readers, is that it is economical to treat ties with a partial dose of creosote. I do not believe these light doses are economical, and feel sure that some railway companies treating their ties in this manner are making a great mistake. Treating railway ties with light doses of creosote oil has been shown by experience to be a very unwise thing to do. For motives of economy some of the French railways undertook to reduce the quantity of oil injected into their ties, from full dose to partial dose, and met with unfavorable results. Why should we not profit by past experience and treat ties to refusal, instead of repeating these mistakes?

In France, where the creosoting of ties is an old industry, heavy treatment has been the rule, forcing into the timber all of the creosote that it would take. In England, also, the creosoting of ties is an old industry, but, on the average a somewhat smaller quantity of creosote per unit volume of timber has been used than was common in France. In comparisons of the practical results obtained in the two countries it has always been reported that the life obtained from creosoted ties in France was longer than in England, purely and simply because of the larger amount of material used per unit of the treated timber. If the long-standing results of experience in these countries have been correctly represented, and if any significance attaches to them, we fail to see the logic in much of the supposedly experimental work that has been done in this country. If the life of the timber depends upon the amount of preservative injected, as long-time experience seems to teach, then skimping the material might be expected to result as skimping usually does in other engineering work, no matter under what name or disguise the art is practiced. The old adage, "Anything worth doing at all is worth doing well," is eminently fitting in the treatment of ties and timber.

W. F. GOLTRA.

---

GAGE OF AFRICAN RAILWAYS.—The first railway in South Africa was a short line, constructed by a company, from Cape Town to Wellington, with a branch to Wynberg, amounting in all to about 63 miles in length. It was begun in 1859, and opened in 1863, and was taken over by the government in 1873. This line was on a gage of 4 ft. 8½ in. When, however, the Cape Colony decided to embark on a policy of railway extension, the question arose whether a narrower gage would not be more suitable to the requirements of the country. The decision in 1869 to construct many extensions in India on the 3 ft. 1 in. gage no doubt influenced the Cape government in the adoption of a somewhat similar gage. This decision practically settled the question for nearly the whole of Africa. Thus, when the political union of South Africa was accomplished, the physical union, through uniformity of railway gage, had been already attained. The gage fixed on was 3 ft. 6 in., and the Cape Town to Wellington line having been converted, construction was pushed forward from three ports—Cape Town, Port Elizabeth and East London.

QUEENSLAND RAILWAYS.—The first section of the railways was opened in 1865 from Ipswich to Granchester, the government in this case being the first builders. The 3 ft. 6 in. gage was adopted. The principles guiding extension in Queensland were different from those of the older states, the general scheme being to run lines inland, more or less parallel to each other, from the several ports of Brisbane, Rockhampton, Townsville, Cairns, Cooktown, and Normanton, reaching, respectively, Cunnamulla, Longreach, Cloncurry, Charleston, Laura, and Croydon. A line in a southerly direction from Towoomba to Wallangarra forms the main line connecting with that from Sydney. A short line direct from Brisbane to the border at Tweed Heads will in the future form a second main line to Sydney when the North Coast Railway of New South Wales is completed. There have been considerable engineering difficulties in the construction of some of the Queensland railways, especially on the Cairns line, 48 miles of which cost about $140,000 per mile. The total mileage reached 3,868 at the date of the last report. Over 1,605 miles were under construction, and 618 were authorized, and in addition there are 215 miles of private railway lines. The government lines in Queensland have cost an average of $35,270 per mile.

# NOTES ON STAKING OUT TRACK CONNECTIONS.

**Solutions of Maintenance Engineering Problems Which Avoid Errors Resulting from the Use of Field Book Methods.**

By W. H. Wilms,
Assistant Engineer, Cleveland, Cincinnati, Chicago & St. Louis, Indianapolis, Ind.

The ordinary field book is of slight value to the engineer engaged in maintenance work in the solution of track problems. None of the problems presented in such books have been solved with a view to practical application. Following the methods outlined in these books, it is not uncommon, for instance, to see new sidings staked with the initial curve tangent to the center of the track from which the turnout leads, although a little study will show that the curve is not necessarily tangent to the frog, and unless it is tangent, an elbow must be thrown in the curve, or a piece of tangent introduced, depending on whether the curve beyond the frog is of less or greater degree than the curve back of the frog. In either case, the siding presents a bad appearance and in case of an extremely sharp curve and close quarters, the engineer would probably find the siding could not be operated until relocated. The only field book that has attempted to treat track problems with a view to practical application by means of a so-called "reference curve" makes such problems really more complicated than they are. In the following notes only such problems as commonly occur in practice are given, leaving it to the ingenuity of the engineer to modify these methods to meet his particular requirements in more complicated cases. While no claim to originality is made in the solution of these problems, it is believed a number of them will be new to not a few engineers.

### SWITCH LEADS.

From both the operating and maintenance standpoints the installation of turnouts leading from curves is to be avoided whenever practicable. When the installation of a turnout on the outside of a curve is unavoidable, the switch leads should be made straight wherever it is possible to do so, as the benefits

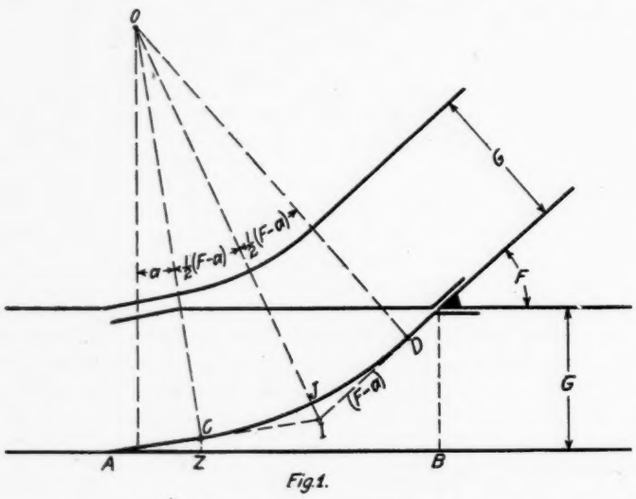

Fig.1.

in safer operation and decreased maintenance of the switch by using straight leads are very pronounced. Often a slight change of alinement or the substitution of a different size frog will readily effect this.

Of equal importance is the reduction to a minimum of the curvature in the leads of a turnout on the inside of a curve. This also can often be effected by slight changes in alinement and the substitution of a higher frog number.

Also, for similar reasons, the alinement of the turnout track immediately beyond the frog is of importance. Where a curve is necessary it should, if possible, be of the same degree as the curvature in the lead; otherwise there results the objectionable feature of a change in curvature in a very bad place, which not only looks bad but is apt to be a constant source of trouble in operation and maintenance. This is especially true where the curvature is sharp and connections close.

In order to obtain a solution to such problems as the above where the alinement of the switch lead is taken into consideration, it is quite necessary to know the actual length and degree of curve of the leads of the road's standard turnouts from straight track. Knowing the length of switch rail, spread at heel of switch and length of frog from theoretical point to toe,

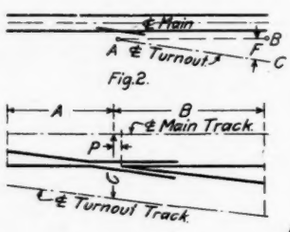

Fig.2.




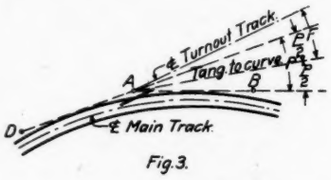

Fig.3.

| No. | Angle | A | B | C | D | p | Lead |
|---|---|---|---|---|---|---|---|
| | | | | | | | |
| | | | | | | | |

Fig.4.

the length and curvature of the lead are readily obtained from the following formulas:

(From Manual of Am. Ry. Eng. Assoc.)

F = Frog Angle
W = Length of Wing Rail of Frog
S = Length of Switch Rail
H = HeelDistance of Frog
G = Gage of Track
R = Radius of Center Line of Lead Curve
a = Switch Angle

$$\text{Lead Dist. AB (Fig. 1)} = (S - W)\frac{\sin \tfrac{1}{2}(F-a)}{\sin \tfrac{1}{2}(F+a)} + G \times \cot \tfrac{1}{2}(F+a)$$

$$\text{Radius of Lead Curve} = \frac{G - H - W \times \sin F}{\cos a - \cos F} - \frac{G}{2}$$

Having once computed this data from the road's standard frog numbers, the engineer should place it in his field book for future reference.

### SIGNIFICANCE OF STAKES.

Due to the fact that many track foremen and supervisors have to work to stakes set by many different engineers, some of whom make it a practice to set stakes indicating the location of a frog on the rail line at the theoretical point and others who set such stakes on the center line of track opposite the actual point, costly mistakes sometimes result. To avoid such trouble, it is a good plan to have some definite system of marking and setting stakes, and after the tracks have been staked out to go over the layout with the track foreman and explain to him the significance of the stakes, so that when track laying begins there will be no chance for mistake or confusion. In most cases it is unnecessary to take into consideration the difference between the theoretical and actual points in the location of a frog. There are a few cases, however, where a failure to observe this difference would result seriously. For example, in the location of the frogs of a No. 10 crossover between parallel straight tracks, 13 ft. center to center, where the track is straight between frogs, the distance from theoretical to actual point of a No. 10 frog with a ½-in. point is 5 in. Now, if stakes are set for theoretical

points and the foreman sets the actual point of frogs to these stakes—a thing he is very likely to do unless the significance of the stakes has been explained to him—there will result a total error in the position of the two frogs of 10 in., resulting in a gage of only 4 ft. 7½ in. in the straight track between the frogs. This is no hypothetical case, but along with other mistakes of its kind is almost of constant occurrence with young and inexperienced engineers. To avoid such trouble, stakes marking position of frog should be set for actual point and plainly marked to that effect. When the location of a frog in the existing track is not definitely fixed by conditions, the point of the frog should be so located as to bring the heel or the toe at

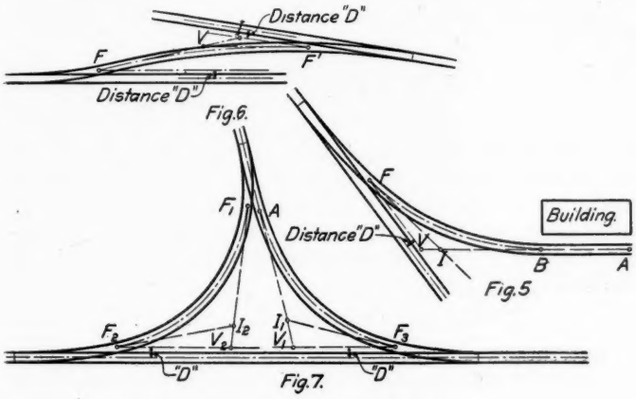


a rail joint. If this is done, only one rail cutting is necessary, and no short rails are required.

### GRAPHICAL SOLUTION OF TRACK PROBLEMS.

A great many track problems can be readily solved by graphical methods. With careful and accurate drafting on a large scale—say 10 or 20 ft. to the inch—many complicated problems are readily solved with all the accuracy usually required in track work. In a great many problems a solution can be easily and quickly effected by making a few trials in the field. In such cases it has been the writer's practice to carry with him in the field a few curve templets, scale, triangle and drawing paper, and by locating the critical or determining points and plotting them to scale, he has generally been able to decrease the number of trials necessary for a solution to one or two.

In staking out tracks to and around existing structures the young and inexperienced engineer may not appreciate the importance of proper clearance and many a track has been staked and afterward built 6 in. to a foot or more too close to an existing structure.

### GENERAL METHODS.

The ordinary method of locating turnouts where the position of the frog in the main or body track is not a critical feature is as follows: Set up the instrument at *A* (Fig. 2), this point being in the center line of the turnout track opposite the point of the frog. Foresight is taken on point *B* gage distance from the center line of main or body track, with the vernier set at minus the frog angle so that when the reading is turned to zero the line of sight is in the center line *A-C* of the turnout track. If, now, the turnout track is to proceed on a curved alinement, deflections may be turned either right or left and the curve located. A stake set back a distance from *A* equal to the length of the lead locates the switch point and the track foreman lines the curve between the heel of the switch and the toe of the frog, either by eye or by using a series of ordinates from the main track rail. If the main or body track is curved (Fig. 3), a backsight *D* and a foresight *B* are set, making the distance *A-D* equal the distance *A-B*. The angle between the line *A-B* and the line *D-A* extended is bisected to obtain a line parallel to the tangent to the main track rail at the point of frog and the frog angle *F* is then turned off from this tangent line. The work of locating the turnout track is thus done with one set up of the instrument, entirely independent of any theoretical assumption regarding the curve in the lead.

To make the curve (if any) in the turnout track tangent at the heel of the frog instead of at the point, which many would consider better practice, it is only necessary to have a table as in Fig. 4, and using the offset *D*, proceed as before.

In locating close connections between tracks and sharply curved branch tracks running into or along buildings where the exact position of the frog is a critical feature of the work, this position may usually be obtained as follows: Let *A-B* (Fig. 5) be the center line of a branch track whose position for the distance *A-B* is determined by the building. Extend line *A-B* towards the main track to point *V* at distance *D* from the center line of the main track. Measure the angle *V* and the distance *VB*. Let *I be* the point of intersection of the line *AV* with the line *FI*, angle *IFV* being the frog angle. Now the criterion for the minimum degree of curvature in the curve *FB* is that the point of intersection *I* shall be equally distant from the points *F* and *B*. This makes the curve *FB* a simple circular curve. To solve the problem, let $FI = IB = T$ and let measured distance $BV = M$.

Then $VI = M - T$; and in triangle *FIV* we have:

Angle $I$ = angle $V$ + angle $F$, and

$$\frac{T}{\text{Sin V}} = \frac{M - T}{\text{Sin F.}}$$

from which the tangent distance $T$ may be obtained. After thus solving triangle *FIV*, first for $T$, then for distance *FV*, the frog may be located by measurement from the established point *V*. This method of treatment is applicable to crossovers between non-parallel tracks (Fig. 6), to wye tracks (Fig. 7), and to crossovers between parallel tracks where frogs or unequal angles are used.

In applying the problems, as found in the field books, where a turnout from a curved track is to form a connection with an established tangent, the engineer is restricted to the use of

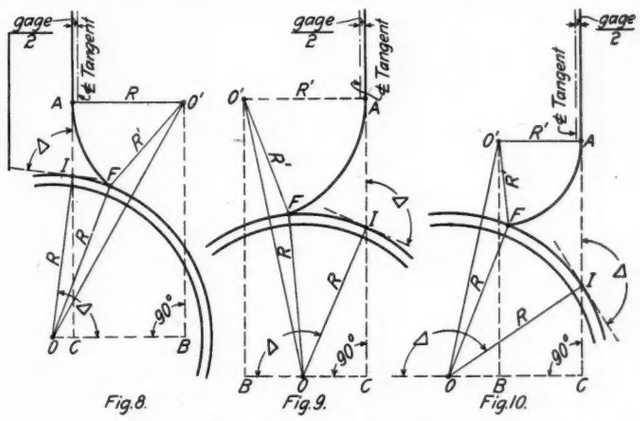


[Case 1. Curves in Opposite Directions. Δ less than 90°.]

[Case 2a. Curves in Opposite Directions. Δ greater than 90°, $R^1$ greater than R cos Δ.]

[Case 2b. Curves in Opposite Directions. Δ greater than 90°, $R^1$ less than R cos Δ.]

but one curve, the degree of which is that of the theoretical curve of the turnout, which equals the degree of curve of turnout from a straight track, plus or minus the degree of the curve of the track from which the turnout springs. The use of this one curve will rarely prove desirable on account of its being either too sharp or too flat.

Four general cases of the problem present themselves, as shown in the illustrations, Figs. 8, 9, 10, 11, 12, 13. The necessary field work in each case consists in measuring the angle between the center line of tangent and the tangent to the center line of the curve at the point of intersection; or better yet, the angle between a line offset one-half the gage from the center line of the tangent and the rail which will pass through the frog, as the latter will simplify the problem, and the radius of the

rail is determined simultaneously by measuring the middle ordinates for one or more chords.

Having the angle of intersection, as described above, the radius of the curved track, and the angle of the frog to be used, and having selected a radius for the connecting curve, the essentials of the location are the distance between the point of intersection and the point of the frog, the central angle of the connecting curve and the distance between the point of intersection and the *B. C.* of connecting curve.

The following solutions offer ready and accurate methods of obtaining the above-named points:

In Figs. 8, 9, 10, 11, 12 and 13 let *CA* represent a line offset one-half the gage from the center line of tangent, which is to be connected with the gage line of the rail of the curved track by means of a frog having an angle of *F* and a curve whose radius is *R*. *O* and $O^1$ are the centers, *I* the point of intersection wher the angle $\Delta$ has been measured, and the other notations are as shown in the diagrams. The rail opposite the frog and the switch rails are not shown as they have no bearing on the problem. Required to determine the angle *I O F*. Then measure on the curve:

Arc F I = R × angle I O F in minutes × a constant (= 0.00029089).
Or chord F I = 2R × sin ½ I O F.

The distance $OO^1$ is determined by solving the triangle $OFO^1$ of which the angle *F* and its including sides *R* and $R^1$ are known. This also determines the angles $FO^1O$ and $FOO^1$.

In cases 1 and 3, Figs. 8 and 11, O B = B C + O C = $R^1$ + R cos $\Delta$
In cases 2a and 4a, Figs. 9 and 12, O B = B C — O C = $R^1$ — R cos $\Delta$
In cases 2b and 4b, Figs. 10 and 13, O B = O C — B C = R cos $\Delta$ — $R^1$.
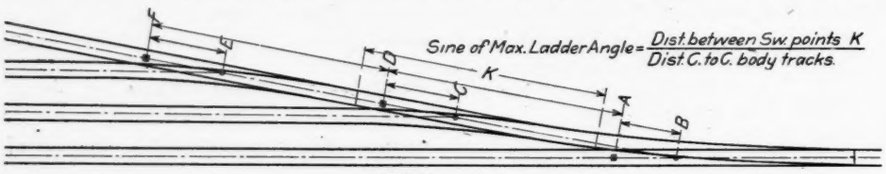
Fig. 15.

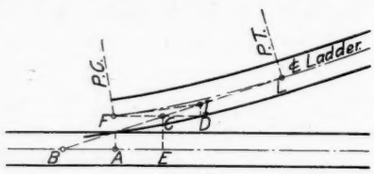

Fig. 16

It should then be noted that when *O B* is computed to be greater than *O* $O^1$, impossible conditions have been imposed; the radius of the connecting curve has been taken too large.

Having determined the angle $O^1$ *O B* from the right triangle *O B* $O^1$, in which *O B* and *O* $O^1$ are known, the angle *I O F* is found as follows:

In cases 1 and 2a, I O F = $\Delta$ — (F O $O^1$ + $O^1$ O B).
In cases 3 and 4a, I O F = 180° — ($\Delta$ + F O $O^1$ + $O^1$ O B).
In case 4b, I O F = $O^1$ O B — (F O $O^1$ + $\Delta$).
In case 2b, I O F = $\Delta$ — (180° — $O^1$ O B + F O $O^1$).
In cases 1 and 2a, A $O^1$ F = $O^1$ O B — F $O^1$ O.
In cases 3 and 4a, A $O^1$ F = F $O^1$ O — $O^1$ O B.
In case 4b, A $O^1$ F = F $O^1$ O — (180° — $O^1$ O B).
In case 2b, A $O^1$ F = 180° — ($O^1$ O B + F $O^1$ O).

To determine the distance AI:

In cases 1 and 2, A I = A C — I C = $O^1$ B — I C,
= $O^1$ O sin $O^1$ O B — R sin $\Delta$.
In cases 3 and 4, A I = I C — A C = R sin $\Delta$ — $O^1$ O sin $O^1$ O B.

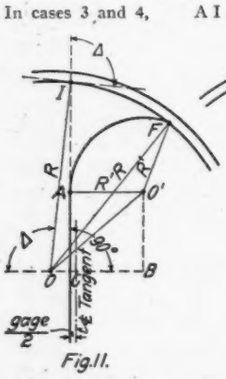

Fig. 11.

[Case 3. Curves in Same Direction. $\Delta$ greater than 90°.]

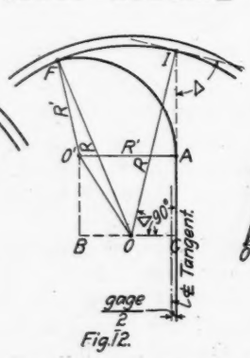

Fig. 12.

[Case 4a. Curves in Same Direction. $\Delta$ less than 90°. $R^1$ greater than R cos $\Delta$.]

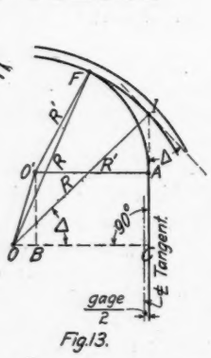

Fig. 13.

[Case 4b. Curves in Same Direction. $\Delta$ less than 90°. $R^1$ less than R cos $\Delta$.]

The engineer should be careful to add or subtract one-half the gage to the center line radii, as the case may require. The point *A* which is the *B. C.* of the connecting curve, and the point *F*, which is the theoretical point of frog *P. T.* of the connecting curve can now be readily fixed in the field and the entire connection staked out.

While the writer realizes that it is better practice to place the frog end of the connecting curve at the heel of the frog, to impose that condition in the above problem would complicate it beyond measure. In inserting 10 or 15 ft. frogs in a curved track, the trackmen cannot help slightly changing the original alinement of the track at that point, and energy spent in making a closer solution than that outlined above will surely be wasted.

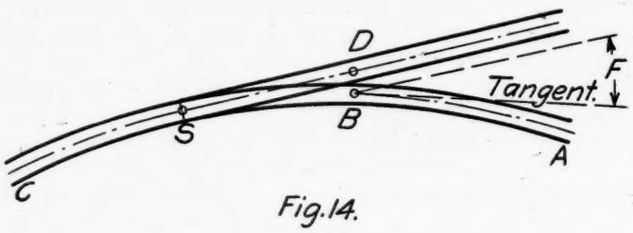

Fig. 14.

### METHOD OF OBTAINING STRAIGHT LEADS.

Theoretically, a turnout leading off the outside of a curve, the degree of which is equal to that for the turnout from straight track will have a straight lead. Practically, however, the lead will not be straight, but curved to a greater or less extent. This is due to the fact that switch rails and frogs are straight and not curved as is generally assumed. When it is possible to do so, it is desirable from both the operating and maintenance standpoints to obtain absolutely straight leads. To obtain straight leads in turnouts leading off the outside of a curve where the main curve is also being staked at the same time, the following method will prove effective. (See Fig. 14.)

After staking out the main curve *ABC* to *B*, the point decided upon for the location of the frog, set up the instrument at *D*, this point being in the center of the turnout track opposite the point of frog. The frog angle is now turned off from a line through *D* parallel to the tangent to the curve at *B*, and the point *S* is located a distance equal to the length of the switch lead from point *D*. The instrument is now set up at *S*, and the main curve is continued from the line *DS*, or switch lead, after which the alinement of the turnout beyond the frog can be proceeded with.

Where conditions permit, it is desirable to have the alinement of crossovers between frog points straight. In the case of crossovers between parallel curved tracks, it is not generally possible to meet this requirement using standard frog numbers, a special frog being necessary in such cases. The writer has known of a number of instances where this requirement of straight track between the frogs of a crossover was of sufficient importance to justify the ordering of the special frog necessary, frog points being comparatively close together in most crossover work.

### LADDER TRACKS.

In order to obtain the maximum car capacity of the body tracks connected to a ladder track, the angle of the ladder track should be made the greatest possible under the conditions.

The criterion for maximum ladder angle is given by the formula (see Fig. 15):

$$\text{Sine of maximum ladder angle} = \frac{\text{Distance between switch points } K}{\text{Distance center to center of body tracks.}}$$

In order that road engines may operate over the ladder track it is desirable that the curve beyond the main track frog be made as light as possible. In a number of extensive ladder layouts the writer has used two and three degree curves in such places with very good effect. The method of staking out such ladder tracks is as follows.

After locating the position of the main track frog the point of intersection of the center line of the ladder track with the center line of the main track, *B*, is found by measuring off the distance *AB*. The instrument is set up at *B*, the ladder angle turned off and the frog points along the ladder located by measuring the computed distances from *B*. At the same time the points of intersection of the center line of various body tracks with the center line of the ladder track are located by measuring the distance *DC*, *FE*, etc., from the frog points. The curve beyond the main track frog is now located. The instrument is then set up at the points *C*, *E*, etc., and the body tracks staked out by foresight established at the opposite ends of these tracks by measuring over the respective track centers of each track from the main track. The curves connecting the various body tracks to the ladder track being very short, it is sufficient to locate only their middle and end points.

To compute the distance AB (Fig. 16), let

T = Tangent Distance of Curve FL

ICD = Ladder Track Angle

Then

DI = T sin F

FD = T cos F

CD = DI cot ICD

FC = FD—CD

AB = BE—AE

= gage × cot ICD—FC.

While the writer believes that the above method of laying out ladder tracks represents the best practice, there are a number of engineers who prefer to make the ladder angle equal to the angle of the frog to be used in the ladder track, thus making the ladder track frogs line up straight with the body tracks. The central angle of the curve beyond the main track frog is then simply the difference between the angles of the main and ladder track frogs. However, the writer sees no justification in sacrificing valuable ground space and consequent car capacity for the little, if any, advantage that is gained by eliminating the slight curve beyond the ladder track frogs. Those who favor this method claim that by the elimination of this curve in the body tracks, switching operations are rendered more safe by reason of the better views afforded trainmen. However, the writer believes this apparent advantage is more imaginary than real.

## ERIE ANNUAL TRACK INSPECTION.

The annual track inspection of the Erie has recently been completed and the awards have just been announced. These awards are based largely on the results of records made by the track inspection car described in the *Railway Age Gazette* of June 21, 1912, these records showing the location and number of low joints, lurches and irregularities in the surface of the track. The question of the amount of money expended on the various sections and subdivisions is also carefully considered. Those sections and subdivisions are selected which appear to have sufficient merit to warrant consideration for the prizes, and are carefully studied with reference to their locations from a physical standpoint, the amount of traffic carried, general condition of the right-of-way, structures and other conditions that in any way affect the awarding of prizes. The study of conditions, taken in connection with the amount of money spent for the work performed and the record of the inspection car, form the basis for the awarding of the prizes.

The first prize of $200 for supervisor on main line was awarded to W. L. Madill, Binghamton, N. Y., and the second prize to C. Joyce, supervisor at Paterson, N. J. The first prize of $200 for supervisors on branch lines was awarded to T. Beam, at Shops, Pa., and the second prize of $100 to W. E. Stenson, Wayland, N. Y. In addition, 23 prizes ranging from $125 to $25 were awarded to section foremen having the best and second best sections on various subdivisions.

## ANNUAL TRACK INSPECTION OF THE NEW YORK CENTRAL.

The report of the annual track inspection on the New York Central & Hudson River for 1912 was recently issued. The track of each supervisor and each section foreman is graded. No prizes are awarded to the supervisors, but the foreman receiving the highest rating on each main line subdivision receives a premium of $3 a month, while the foreman having the best section on each main line division, except the electric division, receives an additional premium of $2 a month. On branch lines the foreman having the best track on each subdivision receives a premium of $2 a month, while a premium of $3 a month is awarded to the foreman having good yard sections. The object of this premium system is to reward the foreman for individual efforts during the year rather than for the appearance of their section on the day of the inspection. For this reason certain sections receiving high marks were excluded in the awarding of premiums because of extra gang work, or new construction, or because the foreman had been in charge of the section for only a short time. Supervisor A. M. Clough of subdivision 23 on the Western division at Batavia, N. Y., received the highest rating, while Supervisor C. E. Doty of subdivision A of the electric division at New York received second highest rating. Section Foreman Michael Burke of subdivision 23 on the Western division received the highest individual rating for a main line section. Premiums were awarded to 34 main line section foremen, to nine foremen of branch line sections and to 10 foremen in charge of yard sections.

## ABSTRACT OF ENGINEERING ARTICLES SINCE DECEMBER 20, 1912.

The following articles of special interest to engineers and maintenance of way men, and to which readers of this section may wish to refer, have appeared in the regular weekly issues of the *Railway Age Gazette* since December 20, 1912:

An editorial commenting on the possibility of a better utilization of existing freight terminals was published in the issue of January 3, page 2.

The Hopatcong-Slateford Cut-off. The second article written by C. W. Simpson, resident engineer of the Delaware, Lackawanna & Western, covering the work on the recently completed Lackawanna cut-off, describes the unusually heavy bridge work, including two of the largest concrete railway bridges ever built in this country. The detailed description of these bridges, as well as of other concrete structures on this cut-off, was published in the issue of January 3, page 9.

An editorial comment on the very large rail orders which have been placed for the coming year was published in the issue of January 10, page 46.

Tonnage Ratings on New and Old Lines. A letter by Paul M. La Bach explaining some features of this question brought out in the discussion of a former article by him appeared in the issue of January 10, page 50.

Mechanical Transference at Freight Terminals. An abstract of a paper by H. McL. Harding, read before the Western Railway Club, giving the essential principles which a successful system of mechanical transference must fulfil and the extent to which various types comply with these essentials, was published in the issue of January 10, page 51.

Two Conflicting Theories of Valuation. An article by Halbert P. Gillette, takes the ground that valuation must be based on market value or on the amount of the investment, but that it should never be based on a combination of the two. Mr. Gillette's article appeared in the issue of January 10, page 55.

Erection of Kentucky & Indiana Bridge. The erection of the super-

structure of the Kentucky & Indiana bridge over the Ohio river at Louisville, Ky., involved some unusual features, the principal one being the erection by cantilever method of two 620 ft. simple trusses weighing 4,400 tons each. An unusual method of making the closure in the bottom chord of these trusses had to be adopted and the use of jacks for raising adjacent spans to secure closure was also unique. An illustrated description of this work was published in the issue of January 10, page 57.

Erection of Monongahela River Bridge. On account of the rapid and wide variations in the level of the Monongahela river, and the necessity for keeping the stream open to navigation, it was decided to erect a 475 ft. single track truss over the main channel, carrying the extension of the Monongahela Railroad, by end launching after the span was completely erected on shore. The details of the barges carrying the river end of the span, the trucks carrying the shore end and other interesting features of this work are described and illustrated in the issue of January 17, page 95.

An editorial on bridge erection by end launching which reviews the use of this method in other countries and comments on the fact that it has not been used in this country, appeared in the issue of January 17, page 91.

Electrification of Heavy Grades. An article by C. L. de Muralt discussing the problem of main line electrification and expressing the opinion that in some cases this may be found less expensive than grade reduction or the introduction of more powerful steam locomotives appeared in the issue of January 17, page 107.

Railway Terminals. An abstract of an address before the Canadian Railway Club by L. C. Fritch, chief engineer, Chicago Great Western, including some interesting data as to the cost of passenger terminals and a clear analysis of the economic features of such expenditure appeared in the issue of January 17, page 109. An editorial comment on this paper was published in the same issue, page 90.

## NEW DELAWARE, LACKAWANNA & WESTERN SPECIFICATIONS FOR PORTLAND CEMENT.

The Delaware, Lackawanna & Western has probably gone into concrete construction to a greater extent than any other railway in this country. No other road has built any structures approaching the Paulins Kill viaduct and the Delaware river bridge on the Hopatcong-Slateford cut-off, described in the *Railway Age Gazette* of January 3, either in general dimensions or in quantities of materials used. These structures will be exceeded in size by two structures on the new cut-off being built north of Scranton on the same road, the larger of which, the Tuckhannon viaduct, will require over 150,000 cu. yds. of concrete. Concrete is being extensively used on this road, not only in bridges, but for station buildings, signal towers, fence posts, and many other purposes. For this reason it is not surprising that the officers in charge have gone into this subject thoroughly, and therefore the following specifications for Portland cement are of much interest.

SPECIFICATIONS FOR PORTLAND CEMENT.

*Definition.*—The cement shall be the product obtained by finely pulverizing clinker produced by calcining to incipient fusion, an intimate mixture of properly proportioned argillaceous and calcareous substances, with only such additions subsequent to calcining as may be necessary to control certain properties. Such additions shall not exceed 3 per cent., by weight, of the calcined product.

*Specific Gravity.*—The specific gravity of the cement shall not be less than 3.10.

*Fineness.*—Ninety-five per cent. of the cement, by weight, shall pass through the No. 100 sieve, and 80 per cent. of the cement, by weight, shall pass through the No. 200 sieve.

*Time of Setting.*—The cement shall not acquire its initial set in less than one hour and must have acquired its final set within ten hours.

*Soundness—Force Autoclave Test.*—Three neat briquettes to be made up in the usual manner and allowed to remain in the damp closet for 24 hours. At the expiration of that time, the briquettes are to be removed from the molds and placed in the autoclave, sufficient water being added to partly or wholly cover the briquettes. The autoclave is then closed, the burners being of sufficient size to raise the pressure to 295 lbs. in not more than one hour. The pressure of 295 lbs. shall be maintained for one hour longer, or a total time of two hours. The pressure is then to be gradually released and the briquettes taken out and placed in the moist closet, where they shall be allowed to remain for one hour. At the end of that time they are to be broken in the standard cement testing machine in the usual manner. The average tensile strength of the three briquettes taken from the autoclave must show a tensile strength of not less than 500 lbs. per sq. in. They must also show an increase of not less than 25 per cent. over the average tensile strength of three briquettes broken at the end of 24 hours. A bar of neat cement, 6 in. long by 1 in. square, shall be made up at the same time the briquettes are made; this expansion bar to remain in the moist closet for 24 hours and to be removed along with the briquettes and tested with the briquettes in the autoclave, as indicated above. After one hour in the moist closet, this expansion bar shall not show an expansion greater than one-half of 1 per cent.

*Tensile Strength.*—The minimum requirements for tensile strength for briquettes 1 in. square in section shall be within the following:

NEAT CEMENT.

| | |
|---|---|
| 24 hours in moist air | 200 lbs. |
| 7 days (1 day in moist air, 6 days in water) | 500 lbs. |
| 28 days (1 day in moist air, 27 days in water) | 600 lbs. |

ONE PART CEMENT, THREE PARTS SAND.

| | |
|---|---|
| 7 days (1 day in moist air, 6 days in water) | 250 lbs. |
| 28 days (1 day in moist air, 27 days in water) | 375 lbs. |

The average of the tensile strengths developed at each age by the briquettes in any set made from one sample is to be considered the tensile strength of the sample at that age. Any results that are manifestly faulty will not be included. The sand briquettes will be thoroughly tamped in the molds by using an iron die to fit inside the sand briquette mold, this die to be struck a number of blows with a wooden mallet.

*Composition.*—In the finished cement, the following limits shall not be exceeded:

| | Per Cent. |
|---|---|
| Loss on ignition for 20 minutes | 4 |
| Insoluble residue | 1 |
| Sulphuric anhydride ($SO_3$) | 1.75 |
| Magnesia (MgO) | 4 |

*Insoluble Residue.*—The insoluble residue shall be determined on a one-gram sample which is digested on the steam bath in hydrochloric acid of approximately 1.035 specific gravity until the cement is dissolved. The residue is filtered, washed with hot water, and the filter paper contents digested on the steam bath in a 5 per cent. solution of sodium carbonate. The residue is then filtered, washed with hot water, then with hydrochloric acid, approximately of 1.035 specific gravity, and finally with hot water, then ignited and weighed. The quantity so obtained is insoluble residue.

*Inspection.*—All cement which is used by the above named company, or any contractors doing work for the company, must be sampled at the mill. The inspector will take a sample from each and every car and properly seal the cars with the company's seals. In no case must cement be shipped from any mill without the company's inspector being present. Should it be necessary at any time to ship cement without inspection at the mill, but which inspection will be made at point of destination, the shipper must so notify the chemist and engineer of tests, and receive special orders from him for the shipping of the cement. The inspector must have access to all parts of the mill, either day or night, when any contract is being filled for the company. The shipper must furnish the office of the chemist and engineer of tests with analysis and physical tests showing results obtained upon the bin from which shipments are made. Samples taken from every car will be sent to the laboratory for further test and inspection. Any sample which fails to meet any or all of the above requirements will be condemned and returned to the shipper, who must pay freight charges in both directions. Samples of cement obtained from cars which continue to show a lower result at the end of the 28-day sand test than is shown in the 7-day sand test will be sufficient cause for the canceling of any contract which at that time may be in force.

# THE STORING AND HANDLING OF MATERIAL.

**Seven Contributions to the Contest Which Discuss Various Phases of This Problem in the Maintenance Department.**

## FIRST PRIZE: ADVANTAGES OF DERRICKS FOR HANDLING MATERIAL.

By A. S. Markley,

Master Carpenter, Chicago & Eastern Illinois, Danville, Ill.

The necessity for handling large quantities of material of various kinds required in maintenance of way work has given rise to the development of steam derrick cars for the economical handling of such material, especially timber and piling. We have in such service a dismantled Bay City pile driver converted into a derrick car. It is equipped with a 7 in. x 10 in. double cylinder engine, shaft driven, with a double drum and its own power mast of standard clearance with a 36 ft. boom of 10 tons capacity at 20 ft. radius. This derrick is equipped with a standard engine tank and pilot car and is self propelling, being able to move five loaded cars on a level track.

With this machine we have been able to reduce the cost of

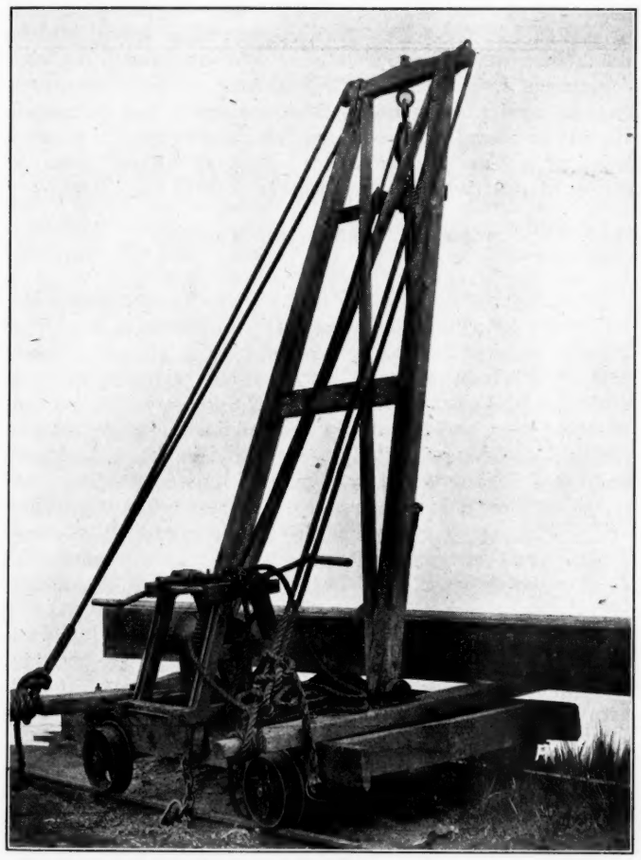

**Hand Derrick Car for Lifting Heavy Timbers.**

loading and unloading lumber in large quantities to 25 to 35 cents per M. We can unload and load piling, separating it into the various lengths, for 0.5 cents per lineal ft. With the old method of rolling it on and off cars and switching cars by hand to distribute the material to the various piles it cost $1 to $1.75 per M. board ft. for lumber, and 5 to 15 cents per lineal ft. for piling. One big advantage of this car is that we are enabled to do our own switching of cars placed on the bridge yard track, eliminating all delays due to waiting for switch engines.

We are also using the car for loading and unloading material of all kinds on the main line where traffic is not too heavy and there is no side track near the work. When a sufficiently large amount of material is to be unloaded to justify it, a temporary track is put in, eliminating delay to trains and at the same time delivering the material at the time it is needed. We frequently bring such material out on the main line with this car, advising the despatcher of our intention beforehand, and protecting against all trains by flagging with regular bridge men. After 43 years' experience I find that bridge men are fully as capable of protecting the derrick car on the main line as regular trainmen are. I have yet to learn of an accident resulting from a failure of bridge men to properly flag trains.

As this derrick will run eight miles an hour it can readily get out of the way of traffic. On branch lines where trains are few it is possible for it to run 10 or 15 miles pulling the bridge equipment with it and saving considerable time. An engineer and two men can load and unload material with it and it is never necessary to use over four men besides the engineer.

Our yard is so arranged that all material is piled as nearly as possible in the order in which it is used; stringers, caps, piles and guard rails are placed in adjoining piles in this order so that all material usually needed at one time can be loaded together, eliminating the moving of cars as much as possible. The tracks are of sufficient length to allow the unloading of material at both sides of one track. Empties are stored on an adjoining track, while obsolete bridge material is stored alongside it.

We also use a hand derrick for handling timber along the main track in the field. Five men can handle material with this derrick; ordinarily it would require 10 men or more without it. It will readily pick up and carry three hard pine stringers packed 32 ft. long. This derrick, shown in the photograph, is built on an ordinary push car and is provided with a crab on a concave drum which fleets itself in hoisting or lowering timber. A chain extends from the car to the rail with a clutch to prevent the car from overturning. This entire derrick, exclusive of the car, did not cost over $20.

## SECOND PRIZE: THE STORING AND HANDLING OF ROADWAY MATERIAL.

By E. K. Coggins,

Chief Clerk to Roadmaster, Southern Railway, Knoxville, Tenn.

Each superintendent should have a storehouse centrally located on his division, preferably at headquarters, for the handling of roadway material. This storehouse should be within trucking distance of the freight house and should be of sufficient size to allow ample floor space so that the different kinds of material can be kept in special piles. Shelves, racks, bins and lockers should be provided in which to keep the smaller articles such as light hardware, etc., while a separate room should be provided for the storage of cement, lime, plaster and similar material. Platforms around the building will furnish ample space for heavy and bulky material such as frogs, switches, guard rails and roadway signs and will also allow room for the storage of building material such as brick, roofing slate and tile. In connection with this platform there should be a shed in which dry and dressed lumber and other material which should be protected from the weather can be stored.

A scrap and lumber yard should be located as near this storehouse as conditions will allow, this yard to have a track through the center with sufficient room on either side for assembling, assorting and separating the different classes of rail and roadway scrap that are accumulated on the line and which must be consolidated for shipment on sale orders. Bridge material such as girders, I-beams, trestle timbers and all other surplus heavy rough building material can be received, stored and distributed from this point to the best advantage.

The work of handling the heavy material can, of course, be

done more economically and satisfactorily if proper facilities are arranged for. A rail loader and a car equipped with a hoist or derrick should at least be available at all times. The local section forces should not be required to furnish the labor to handle this material. A better way is to organize a small force with a good foreman for this work, and any spare time can always be spent in assisting the track men. A handy man familiar with the different classes of material should be placed in charge of the storehouse. Such a man would be kept busy receiving and forwarding shipments, checking invoices and keeping the proper records of all transactions.

It is necessary for each track supervisor to have a place at his headquarters where he can store a small stock of emergency material, tools and supplies. The handiest and best location in nearly, if not all cases, is found at the rear of the freight depot where small local shipments can be handled with the least expense and trouble and can be gotten out on the line quickly in case of emergency.

Each section should be provided with a good tool house in which to care for the material furnished for repairs. The importance of this does not seem to be realized as section gangs on many roads are provided with nothing more than a 3 ft. x 6 ft. tool box in which to store supplies. Any experienced foreman will vouch for the statement that enough is lost in a short time in broken shovels, track gages and other light tools, which are piled in a box with heavy track jacks and claw bars, to build a standard tool house. A greater loss, however, can be checked up in such items as track bolts, frog, switch and signal repair parts that are piled behind and under the tool boxes. These are neglected for a short time and soon become so rusty that they cannot be used and are placed in scrap and a new supply furnished, a portion of which is likely to reach the same destination at an early date. Time as well as material is lost from this cause. A crew will wait 10 or 15 min. for one of their number to replace the contents of the box, thrown out in search for a cotter key, chisel or some other small article. At times the hand car is covered with snow and must be cleaned off. Perhaps a fire will have to be made to thaw out the bearings before it will "roll," and it is often necessary for all "hands" to walk and push the car, which would not have happened had it been sheltered in the tool house and protected from the storm.

Shipping material and tools in small local shipments to the different sections has always been found unsatisfactory. As a rule train crews do not like to stop at a way station for a keg of spikes, and if they have only a small amount of company material for that station they will carry it by. Switches are hard for trainmen to handle and a great many switch points are thrown from the cars and broken. A much better plan is to run a material and supply car over the division once each month at a stated time, which the section men can meet to draw their supplies. The roadmaster or supervisor should accompany this car and issue only the amounts required. Old tools can be exchanged for repaired ones and any surplus can be taken up and distributed to other points where needed or returned to the storehouse. At the same time two or more cars, if necessary, should be carried for the purpose of picking up all mechanical and roadway scrap that section forces have gathered during the month, which should be piled at their headquarters ready for loading.

## HANDLING MAINTENANCE MATERIAL ON THE SANTA FE.

By M. Ganley,

Roadmaster, Atchison, Topeka & Santa Fe, Argentine, Kan.

All track ties are piled, on receipt, as close to the place where they are going to be used as possible and are than protected from fire and high water. Where high water must be considered, due consideration should be given to the location, as it is cheaper to handle ties a second time to get them where they are to be used than to send a force of men to move them hurriedly in case of high water.

Where bolts are not to be used for some time they should be stored at stations and kept under cover to protect them from the water. Switch material is handled in the store department yard where each different class of material is piled in separate piles in proper order, with switch point fastenings, for instance, at one end of the row, and switch points, guard rails and fittings in proper order, the frogs being at the far end of the row. Bolts are stored with the section of rail that they fit. With such an arrangement it is almost impossible even for foreigners to make a mistake and get the wrong kind of material. Switch material is shipped to the store department and unloaded by track forces who charge the labor to the store department. This department carries the stock of material while the track department keeps the yard in shape.

Our yard is not large enough to warrant the installation of any labor saving devices and the main economy is gained by close co-operation between the store and track departments. The roadmaster makes a monthly check of material on hand with the storekeeper and then gives him an idea of what material will be required the coming month and how to order it to take care of the needs. Also, as material is accumulated on the division from time to time which is of no value to the track department, it is loaded and turned over to the store department to send to some other division where it may be needed. By this co-operation between the two departments the accumulation of a large amount of dead stock at different points is prevented and the material charge is reduced accordingly.

## SMALL MATERIAL YARDS.

By M. Riney,

Foreman, Bridges and Buildings, Chicago & North Western, Baraboo, Wis.

We have adopted the following method of handling our bridge material on the Madison division, storing it at four different points. Where possible we block up old bridge stringers to about the level of the floor of a car and pile stringers and caps on this. Our season's supply of material comes in between March 1 and June 1, usually badly mixed in flat, gondola and box cars. It is unloaded by a gang of three or four men and is held at these points to be sent out as required by the district bridge foremen. The cost for unloading the material averages about 70 cents per thousand board feet. It usually costs about 40 cents per thousand board feet to load it again as it is usually loaded on flat cars. A distinct saving is thus made in the cost of handling the material and it is also easier to keep the weeds and grass away from the timber. Air spaces are provided between each layer of material by using small 1 in. x 4 in. boards between the adjacent timbers.

When material is desired for bridge renewal it is handled by the pile driver crew, as our yards are not large enough to warrant the use of a derrick. At two of these yards we hold emergency material including piling, stringers, caps and ties sufficient for a ten span pile bridge. If this material is not called for during the season it is used for temporary bridge work and is replaced with new material.

## HANDLING MATERIAL IN SMALL YARDS.

By A. Palm,

Roadmaster, Central California Traction Co., Sacramento, Cal.

The cost of handling material by hand is practically the same per pound or per foot in small yards as in large ones. While planning to install machinery to reduce this cost of handling in large yards, it is always well to consider that some provision should be made to reduce the cost in the smaller yards as well. The following notes refer particularly to methods for reducing the cost of handling material in yards where the installation of machinery on a large scale is out of the question.

A small hand derrick on an "A" frame can be used to handle frogs and other cumbersome material. With it a couple of

men can load and unload such material with ease and safety, while the cost is low in comparison with what it is when such material is handled by hand. I have in mind a device similar to the American rail loader, with a cylinder operating by air pressure with a switch tank and air compressor mounted on the floor of the car. A gasoline engine similar to that used on hand cars is installed on this car to drive the compressor and to propel the car. The wheels should be without flanges to allow the car to be moved from one place to another by laying a few planks in front of it for a runway. With a machine of this type three or four men could load or unload and store as much material in a given time as 12 or 14 men could do by "main strength and awkwardness." It would probably reduce the cost of handling material at least 60 per cent.

The machine could be easily loaded on a flat car and taken out on the road to load or unload rails, distribute new rails and concrete pipe, etc. As the wheels would be without flanges it would propel itself from one car to another after loading or unloading the car ahead of the machine. It could be kept in use almost constantly and would save its cost several times during the first year.

## HANDLING SUPPLIES THROUGH THE STORE DEPARTMENT.

By R. O. GILLIES,

St. Louis & San Francisco, Fort Scott, Kan.

It does not seem to me advisable for railways to maintain material yards for the storage of surplus material as it is better and quicker to ship the material directly to the point where it is to be used. On large railways the material is standardized as far as possible and the store department should carry it in stock to be shipped when ordered. The cost of loading this material at the storehouse, together with the cost of unloading at a material yard, loading it again for shipment where needed and unloading it at destination is expensive. A large portion of this cost can be avoided by eliminating the second handling.

We have recently received instructions to do away with material yards. It is now the practice to order both cross and switch ties for the year sent to one point, usually the road-master's headquarters, where they are held on cars until a statement is furnished showing the contents of the car. The cars are then rebilled to the points where the ties are required. The statement of contents is generally received before the car reaches the division. In addition to saving money by eliminating the rehandling, we also avoid having excess surplus material on hand. By having the section foremen render a monthly report showing the material on hand, received by shipment, received from tracks repaired or taken up, material used or shipped and material on hand at the end of the month, we know just what stock we have on hand. In case of an emergency we can go through these reports and instruct the foremen on a section having the required amount of material on hand to ship it to the point needed.

All scrap rail is held at a central point ready to ship on sales orders. Four scrap cars go over the subdivision on local trains, two cars each way, whenever there is sufficient scrap on hand to warrant it. All foremen are notified to meet the train and load what scrap they have. When the two locals meet, the one that is going toward the station where the scrap is held for orders takes all the cars to that station. When the cars reach this point the section force sorts the scrap, placing the mechanical scrap on one car and the track scrap on another and billing them to the general storehouse. Scrap rail is sorted from the miscellaneous scrap and is held in a convenient place for a sales order. This material is also picked over by the mechanical department, and material fit for further use is removed before the cars are sent to the general storehouse. On one such inspection recently $1,000 worth of good material was culled from the scrap cars.

## SYSTEMATIC CLASSIFICATION OF MATERIAL.

By JOSEPH J. MORGAN,

New York Central & Hudson River, Kingston, N. Y.

One of the greatest difficulties in the shipment of material is the failure of the foremen to explicitly state what they require. Frequently the storekeeper is doubtful as to just what material the foreman refers to on his requisition. This results either in delay in shipping the material or in the wrong material being shipped, and in either case requires additional labor. This condition can be improved on, if not entirely eliminated, by having all items of material carried in stock listed and classified as to size, weight, etc., in alphabetical order, each item being numbered. This list should be printed on heavy cardboard in heavy type. Each foreman should be furnished with one of these lists and instructed to place it in the tool house or some other convenient place for reference in ordering material. On some roads foremen are supplied with perforated order books arranged so that in making out orders two copies are made, one being kept by the foreman for record. With a few additions such a book would do very well. A column should be added with a heading, "Item number per classified list." In this column reference should be made by the foreman to the classified list giving the item numbers of the articles desired as shown on the list. This system might prove somewhat difficult for the foremen to grasp at first, but after they became familiar with the item numbers this trouble would vanish.

In handling staple material, such as bolts and spikes, which are usually received in large quantities, they should not be unloaded when received at headquarters, as is the general rule, but arrangements should be made to have the car or cars placed in way freights and a sufficient supply unloaded by each section gang to take care of their needs, thus eliminating to a large extent the numerous requests from foremen and the rehandling of this material. Of course there would undoubtedly be exceptions to this program on account of the delays in releasing cars in some locations. The proper handling of material for special work should also receive careful attention, and a little foresight in this connection would do away with much extra labor. When material is to be used in connection with a special piece of work, the requisition should state that it should be shipped directly to the work.

## SOUTHERN PACIFIC'S MANUFACTURE OF TRACK FASTENINGS.

For a number of years the Southern Pacific has been converting all forms of scrap iron into tie plates, angle bars, spikes and other track fastenings. Owing to the gradual consolidation of many lines having different patterns and weights of rail, a large number of different kinds of fastenings have been required from time to time. Most of these have been wanted in small numbers and could not be bought economically in the open market as they were no longer being rolled. Also the market for the constantly increasing stock of scrap iron is limited in the western states, and it was decided to use this material for the manufacture of these special fastenings which could not be readily bought. Accordingly arrangements were made to convert this scrap material into these special patterns of fastenings and the necessary equipment was installed in the Sacramento shops. The output varies greatly with the demand and with the amount of scrap available, but practically all the scrap is now utilized for this purpose. About 1,700,000 tie plates are made each year in addition to angle bars and other fastenings. While no definite figures of the savings can be arrived at, because these figures are dependent on the assumed prices with which the various departments are credited for the scrap received at the mill, it is known that there is a fair profit in actual cash besides the convenience of being able to secure these special fastenings when needed.

## HANDLING TRACK MATERIAL ON THE PITTSBURGH & LAKE ERIE.

Much attention has been paid to the storing and handling of track material on the Pittsburgh & Lake Erie, a prominent result of which is the maintenance of way storehouse at McKees Rocks, Pa. At this storehouse all the track material required on the division between Pittsburgh and Youngstown, Ohio, comprising three supervisors' districts, is handled. The storehouse consists of a building 238 ft. x 42 ft., partially enclosed, with an enclosed storeroom and office 112 ft. x 42 ft. on the north end. The building is of frame construction, the open portion being enclosed from the roof down to a point 13 ft. above the ground with a galvanized corrugated iron siding. The heavier materials, as frogs, switches and guard rails, are stored in this open area, each class and weight by itself so that any material can be secured at once without rehandling. The smaller materials, as guard rail clamps, emergency lights, nut locks, etc., are stored on the platform at the north end of this shed, while the various tools are kept in the enclosed portion of the building next to the office. Track bolts and spikes are stored on the platform on the opposite side of the track which passes through the building.

The open portion of the building, in which the heavier materials are stored, is served by a five-ton Shaw traveling electric crane which moves on an overhead track with a span of 38 ft. 6 in. between rails. The crane is equipped with a 10 h. p. motor for movement transversely, a 15 h. p. motor for the large hoist and a 10 h. p. motor for the small hoist. The crane handles all heavy material and is operated by the supervisor's clerk from the office, assisted by two blacksmith's helpers from the maintenance of way blacksmith shop who place the clamps on the material and steady it when moving. It requires about 50 hours per month of the clerk's time and 200 hours of the laborer's time to handle the material, practically all of which is unloaded and loaded from gondola and flat cars, except bolts and spikes, which are shipped in box cars. In contrast with this, before the crane was installed, a gang of from 20 to 25 men was required an average of four days a week during the summer to handle the material, spending the rest of their time on regular track work. Not only has the installation of the crane greatly decreased the cost of handling the material, but

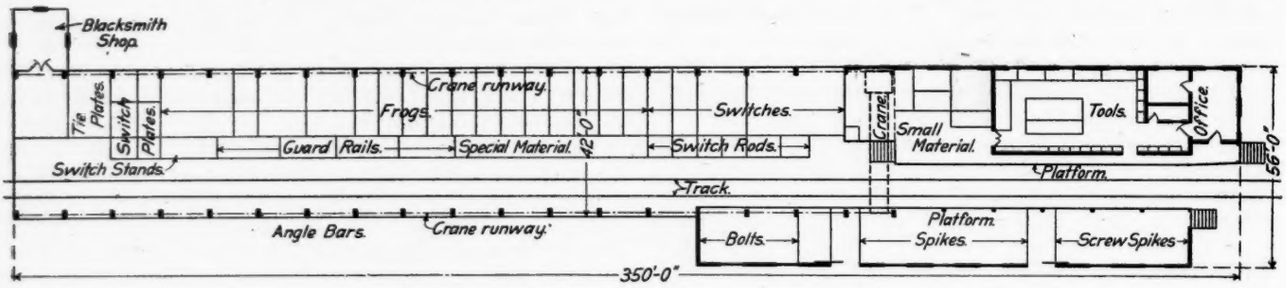


**Plan of Pittsburgh & Lake Erie Storehouse at McKees Rocks, Pa.**

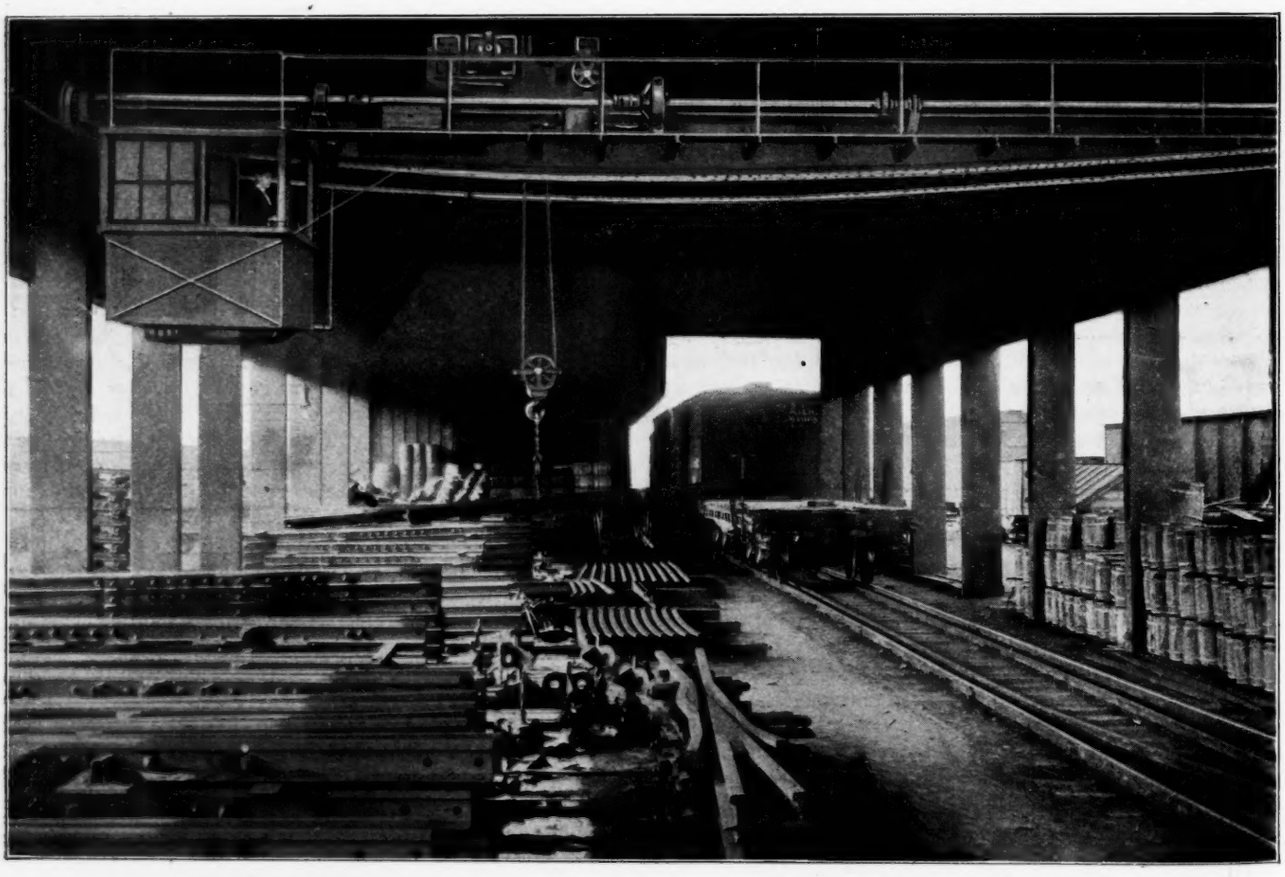

**Pittsburgh & Lake Erie Maintenance Storehouse at McKees Rocks, Pa.**

it has also permitted its loading at any time during working hours, for the men required are now always present; it has also eliminated the frequent injuries common in handling heavy material.

One car of miscellaneous track material and small supplies is loaded for each of the three supervisors' divisions monthly. Special shipments for definite pieces of work and emergency material are sent out continually, no emergency material being stored elsewhere on the division. All rail and track fastenings for relaying work are shipped from the mills direct and unloaded at the point required, but all bolts and spikes pass through the storehouse, although they are not necessarily unloaded from the cars if required on the line in carload quantities at the time of receipt. During the past season 1,140 kegs of bolts, 2,500 kegs of track spikes, 327 frogs and 388 switches complete have passed through the storehouse in addition to proportionate amounts of miscellaneous track material.

A space at the end of the open building and a small building adjacent are devoted to a maintenance of way blacksmith shop for light repairs of frogs, switches and track tools, one blacksmith and two helpers being employed. The storehouse crane serves this end of the shop and handles the heavier materials for the blacksmith shop.

SCRAP YARD.

All scrap on the division is collected monthly and brought to a central yard about one mile west of the storehouse. At this point a platform 700 ft. x 40 ft. is provided with a track on one side level with the platform and another on the opposite side depressed so that the top of a gondola car is level with the platform, the topography of the land favoring this arrangement. As the cars of scrap come in they are weighed on the high track before unloading. The material is sorted and classified in separate piles for sale, that suitable for repair purposes being turned over to the blacksmith. The purchasing department is advised from time to time of the accumulation of this material and it is loaded on its instructions into cars on the low track. Beyond the rear end of the platform the two tracks converge, with the high track about 3 ft. above the low one, so that material can be transferred from car to car if desired without going over the platform. The amount of scrap received here amounted to 22 cars during the month of November, 1912, although the monthly average is only about 12 cars.

These installations were worked out under the direction of Edwin F. Wendt, assistant engineer, Pittsburgh & Lake Erie, and are in charge of W. E. Davin, supervisor at McKees Rocks, Pa.

## THE APPEARANCE OF TRACK.

BY GEORGE J. SHARKEY,
West Shore, Kingston, N. Y.

There are many little considerations in closing a summer's track work which, if taken care of, add distinctly to the effectiveness of the season's work by improving the appearance of the track. All clay and rock cuts and ditches should be thoroughly cleaned, the ditches to be well sloped and graded to insure a free run of water. The material from the cuts can be used economically in widening shoulders or strengthening riprap. The right of way should be systematically mowed, never allowing the weeds and grass to gain any headway. No ties should be piled along the right of way, as they can be burned as the work progresses just as easily as at the end of the season. The trackwalker, foreman or other members of the section gang can pick up waste paper and other debris as they walk over the track and touch a match to it in some safe place. A complete picking up of scrap at least monthly and storing for sale or sending to the scrap platform, adds considerably to the credit revenue, prevents a further waste by the weather and greatly improves the appearance. Clean station platforms and dust-free driveways at freight houses should be considered. A little cleaning up on Fridays around stations adds to Saturday's and Sunday's dressing up and leaves a strong impression. Well maintained fences, cattle guards and crossings are most essential. A little wire here and a little paint there work wonders. A neat ballast line either on stone or gravel gives a simple yet effective set off to the track.

The opinion gained of a track both by the traveling public and the officers is governed largely by the appearance. If an officer finds things scattered and unkempt he will undoubtedly look further to find things to criticize, while if he finds things in a shapely order, he will invariably overlook a little discrepancy here and there, feeling that everything could not be reached at once, but that each will be taken care of in turn. If the subject of appearance is given constant attention the usual inspection will be invited, instead of scorned, and the usual rush before inspection will be eliminated.

## A BLOW TORCH FOR CLEANING SNOW AND ICE FROM SWITCHES.

A gasolene blow torch has recently been devised and put in service for removing snow and ice from frogs, switches and interlocking connections. It operates in a manner similar to the ordinary gasolene blow torch and can be handled by one man. It is made of heavy brass tubing 2 in. in diameter and about 5 ft. long., with a burner at one end of the tube and a gasolene valve and pressure pump at the other end. A controling valve is placed inside the tube to regulate the flow of fuel. This tube has a capacity of three quarts of gasolene, or sufficient to last about three hours. The flame is about 2 in. in diameter and about 12 in. long. The over-all length of the device is 5 ft. 9 in., and it weighs about 8 lbs.

**Using Blow Torch and Pick for Removing Ice.**

The torch is designed for the purpose of thawing ice, snow or sleet about switch points, derails, frogs and other movable track connections, and is of special assistance in automatic signal territory, or in power interlockings where switch adjustments must necessarily be accurate. It was tested a few days ago in the Chicago Great Western yards at Chicago, following a sleet storm. One man using the torch cleaned 160 switches in three hours. This work would have required about five men for an equal time using picks and brooms in the old way. The torch is manufactured by the T. Turner Brass Works, Sycamore, Ill.

# AMERICAN WOOD PRESERVERS' CONVENTION.

**Abstracts of Papers Presented at the Ninth Annual Meeting Held This Week in Chicago, with Resume of Discussions.**

The ninth annual convention of the American Wood Preservers' Association was held at the Hotel Sherman, Chicago, January 21-22-23, 1913, with about 200 members and guests in attendance at the various sessions. The officers of this association for the past year were: President, E. A. Sterling, forest and timber engineer, Philadelphia, Pa.; first vice-president, A. M. Smith, Ayer & Lord Tie Co., Argenta, Ark.; second vice-president, H. M. Rollins, Gulfport Creosote Co., Gulfport, Miss.; third vice-president, G. B. Shipley, Pittsburgh Wood Preserving Co., Pittsburgh, Pa.; secretary and treasurer, F. J. Angier, superintendent timber preservation, Baltimore & Ohio, Baltimore, Md.

In his opening address, President Sterling called attention to the shortage in the supply of creosote which has become more pronounced during the past year and to the action he had taken to prevent the placing of a 10 per cent. import duty on creosote oil, as outlined in the proposed Underwood tariff revision bill, basing his plea upon the fact that the wood preserving industry is so closely allied with the conservation of timber resources that the placing of this tax on creosote would work to the harm of that industry and thereby to the conservation of the forests. He also advocated the taking up by the association of a limited amount of committee work, believing that the association is now strong enough to take up some of the more serious problems confronting the industry and to work out solutions for them.

The annual report of the secretary-treasurer showed a total membership of 157, a net gain in membership of 53, or over 50 per cent., within the past year, while the finances were in an equally prosperous condition.

## THE PRODUCTION AND SUPPLY OF COAL TAR CREOSOTE.

By E. A. Sterling,
Consulting Timber Engineer, Philadelphia, Pa.

In 1912 the consumption of creosote in the United States on the basis of the average 7½ per cent. increase of the previous four years, exceeded 78,000,000 gal., of which about three-fourths was imported. In the same year R. P. Perry* estimated that 165,000,000 gal. of coke oven and gas works tar would be produced, and an additional 375,000,000 gal. would go to waste in beehive coke ovens. The tar actually produced would have yielded, if distilled to hard pitch, approximately 50,000,000 gal. of creosote; while the tar which was not even recovered would have given us another 112,000,000 gal., or a theoretical grand total of 162,000,000 gal. The first 50,000,000 gal. includes the water gas creosote derivable from part of the gas works tar. This amount is indeterminable, but it will serve the purpose to reduce the total figure on this account by 12,000,000 gal., making it 150,000,000 gal.

We thus have a potential creosote supply nearly double our present requirements, or enough to treat about 1,500,000,000 board ft. with 10 lbs. per cu. ft., whereas in 1911, 882,000,000 ft. were treated with straight creosote. Actually we are producing only about 15 per cent. of our potential creosote supply, or 30 per cent. of our consumption, and are drawing on the European market for the balance, which amounts to about 45 per cent. of what we are wasting at home. This waste is not wanton nor deliberate, but merely a result of economic conditions.

The available supply of creosote obviously depends first on the amount of coal tar produced, and, secondly, on the manner and completeness with which it is distilled. We have not produced creosote up to the limit of our tar production because it has not been profitable to distill to hard pitch, and we have not recovered all the tar possible on account of the capital outlay involved and the lack of a market for certain coal tar products. In the United States the present outlook for an increased production of tar and creosote is promising.

Gas works tar is produced in many of the larger cities, and while the use of electricity for lighting and the manufacture of petroleum gas tend to keep down the output of gas works coal tar, indications are that the present output will remain fairly constant, or, if anything, increase. The increasing cost of petroleum will discourage water gas installations and to that extent increase the output of coal gas.

Coke oven tar is the largest source of creosote and it is mainly in this kind of tar that we may look for an increased output. Quite recently at some of the larger iron and steel manufacturing and distributing centers there have been extensive developments in by-product ovens. The more notable examples are at Birmingham, South Chicago, Joliet, Gary, Milwaukee and South Bethlehem. It is stated that during 1912 new by-product ovens went into operation which have a capacity of 35,000,000 gal. of tar per annum, although this output may not be immediately reached.

The refining of coal tar in the United States has developed along different lines than in Europe. We have concentrated largely on pitch, while Europe has specialized on coal tar by-products, each country catering to its market. A fundamental handicap in this country until recently has been the lack of a market for the pitch, which is the largest constituent. Gradually the soft and medium pitch came into use for roofing papers, road binders, paving block filler and other purposes; while more recently the hard pitch has been in demand as a binder for briquettes, for electric carbons, and cast carbon forms of many kinds. The lighter oils, such as benzol, naphtha, touol, crude carbolic acid, etc., find various uses, while the heavy oils constitute the creosote for wood-preserving purposes.

It is probably in the manufacture of the more refined coal tar products that domestic developments will be most tardy, for as yet it has not been profitable to compete against Europe in the production of colors, perfumes, extracts and the numerous and varied oils and compounds derivable from coal tar. On the other hand, we are far ahead of European distillers in our knowledge of roofing and waterproof pitches and road binders.

With the development of a market for pitch and other tar products which makes it profitable to refine coal tar and to convert beehive coke ovens into by-product ovens, come other developments which, in the face of an increased tar output, tend to change the distillation methods so as to result in a decrease in the amount of creosote produced. These developments are an increasing use of refined tar for road purposes and of crude tar for fuel. On the other hand, the increasing demand for disinfectants, which can be made from tar, and the growing use and higher value of the middle and heavy oils used for wood-preserving purposes, may be expected to counteract the tendency toward the use of crude or refined tar. Still other important developments, which may cause the production of domestic creosote to increase more rapidly than the production of tar itself, are pending.

Whether the tar distillers in Europe can supply their local market and continue to take care of our increasing demands, depends on the rather complicated situation as regards European trade arrangements, and on the developments along the many diversified lines of coal tar use and distillation. We can, perhaps, draw certain conclusions from the fact that the exports of creosote from Great Britain have dropped from 150,000,000 tons to about 115,000,000 tons in 1912; while in Ger-

*From paper on "Tar Distillation in the United States," presented at the Eighth International Congress of Applied Chemistry.

many, although the distillers are largely increasing their output and the amount of creosote exported in 1912 increased 25,000 to 30,000 tons, the production has not fully kept pace with the increased demand from many sources.

In Europe, as in the United States, there is an increasing use of tar for road purposes, and there are other developments which tend to disturb the tar market and force prices upward. Gas works tar has probably contributed a larger percentage of the total than in the United States, but it is likely that water gas will be produced in some of the larger gas works where coal tar has previously been the principal output, unless petroleum prices advance too sharply. In Germany the adoption of the Diesel engine has introduced a new factor and German distillers are advocating the use of creosote oil for fuel in this type of engine. Moreover, the German government is using increasing quantities of coal tar fuels in the navy, so it remains to be seen how these various developments will affect the available supply of wood-preserving oils.

The most definite conclusions we can draw from a limited survey of the foreign field is that Europe will be in position to continue the export of large quantities of creosote, but that the increasing demand and the various developments in the coal tar industry promise to strengthen prices, and in some cases materially reduce the supply available for export.

The procuring of an adequate supply of creosote at reasonable cost may be safely considered a vital factor in the wood-preserving industry in the United States, even though other preservatives, particularly zinc chloride, are used in large quantities. Even before there was any question as to the creosote supply being inadequate, the factor of transportation made itself strongly felt. Plants on or near the Atlantic and gulf seaports were always sure of a foreign supply, and could at the same time draw on the domestic market. Inland and Pacific coast plants are more or less handicapped unless located near some of the large producing centers. With comparatively few large sources of production, and most of these east of Chicago, rail freights figure strongly in the delivered cost. On the Pacific coast the question of procuring a supply of creosote oil has always been difficult to solve, and it is not certain how much the Panama canal will improve the situation.

Up to a year or two ago it is not likely that railroads or commercial treating companies were often deterred from building plants by uncertainty as to their oil supply. Plant construction for a time went ahead at a rapid rate on the assumption that the creosote supply would take care of itself, which it largely did. It may do the same in the future and the indications are favorable, but at present it would be unwise to start a large development without looking into the situation carefully.

There is very little which wood preservers can do about the question of creosote supply. They can, however, do considerable in the matter of consumption. First of all, it would no doubt help both the domestic and foreign producers in meeting the requirements, if the consumers would anticipate their needs as far ahead as possible. In the matter of consumption the tightening up of the market should strongly stimulate investigations of preservative mixtures and of new preservatives. Crude oil, water gas creosote, and refined tar in mixture with creosote will bear further investigation, while blast furnace oil, of which some of the English roads are using considerable quantities, should be tested out further. Crude oil is being given a thorough trial by the Santa Fe, and since the sources of suitable cheap asphaltic oil are in regions where creosote is high in price, its use with reasonable restrictions should reduce the drain on creosote. Water gas or oil tar creosote has not received general recognition as a wood preservative and investigations have demonstrated that it lacks the high antiseptic qualities of coal tar creosote, yet it is not unlikely that it will eventually be used. The most rational way of using it, in the light of our present knowledge, would be to add a comparatively small percentage of it to coal tar creosote for the purpose of cheapening the latter.

It would also be profitable to look closely into our treating methods and eliminate excess injections of oil where it is reasonably certain, because of mechanical wear or for other reasons, that the lighter treatments would be sufficient. Even a 10 per cent. economy in the use of creosote throughout the country would go a long way towards keeping within the limits of supply.

## A COMPARISON OF ZINC CHLORIDE WITH COAL-TAR CREOSOTE FOR PRESERVING CROSS-TIES.

By Howard F. Weiss,

Director, Forest Products Laboratory, Madison, Wis.

Although a great many preservatives to preserve cross-ties have been tested, zinc chloride and coal-tar creosote are now by far the most extensively used in the United States. The author has frequently been called upon to compare these two preservatives; in fact, the number of such requests has been so large that it has led to an examination of the merits and deficiencies of each preservative. This paper aims to present the information which has thus been collected and to invite discussion. Please note, however, that only cross-ties are considered, and the data which follow should not be confused with poles, piling or other products.

According to statistics gathered by the Federal government, the number of cross-ties treated with zinc chloride in the United States shows no increase in the past four years, while the number treated with creosote has increased rapidly, as shown by the following figures.

| | 1907. | 1908. | 1909. | 1910. | 1911. |
|---|---|---|---|---|---|
| Zinc chloride ..... | 9,864,765 | 8,640,230 | 8,051,054 | 9,195,861 | 9,445,961 |
| Creosote ..... | 5,750,874 | 9,620,420 | 9,943,360 | 14,841,843 | 16,510,721 |

This in itself might be looked upon as an answer to the query: "Which is the better of the two?" But after a careful investigation it appears that this question cannot be so easily dismissed. I asked twelve leading operators of wood-preserving plants for their opinion as to why the number of Burnettized ties in this country did not increase. Their replies, which are instructive and certainly worth careful thought, group themselves as follows:

Poor workmanship in Burnettizing, either through ignorance or otherwise.
The zinc leaches from the ties, or the railroads fear that it will.
The salesmen of coal-tar creosote are more industrious than the zinc salesmen.
Zinc-treated ties cause trouble with the automatic signal apparatus.
The empty-cell creosote processes reduce the initial cost of treating with creosote.
Railroads consider creosote cheaper in the long run, and because ties are growing scarcer they want to give them the treatment which makes them last the longest.
Railroad engineers have concluded that zinc chloride has a tendency to corrode spikes.
Tie treatment is now largely east of the Mississippi, where the climate is moist, while Burnettizing began west of the Mississippi, where the climate is dry.
Heavier tie-plates are now being used, warranting a more permanent preservative treatment.

The factors which I have considered in comparing the two preservatives under discussion may be grouped as follows:

(1) The toxicity of the preservative—that is, its ability to prevent decay.
(2) The ability of the preservative to penetrate the tie.
(3) The permanency of the preservative in the tie.
(4) The effect of the preservative on the strength of the tie.
(5) The effect of the preservative on the corrosion of spikes and plates, and the operation of block signals.
(6) The financial saving due to the use of the preservative.

Of somewhat lesser importance are:

(7) The uniformity in composition of the preservative and ease of securing it.
(8) The combustibility of the preservative.
(9) The ease of handling the preservative and ties treated with it.
(10) The ease with which the penetration of the preservative can be determined.

(1) Zinc chloride relies upon its toxic properties solely to protect ties from decay. Creosote, in addition to this, has more or less of a waterproofing effect, which also acts as a protection against decay. According to the toxic tests made by Malenkovic, zinc chloride offers about twice as much resistance to fungus attack (penicillium) as coal-tar creosote free from phenol. Tests made at the Forest Products Laboratory show that ordinary coal-tar creosote has about the same toxicity as zinc chloride,

0.4 per cent. being sufficient in each case to prevent fungus growth (Fomes annosus).

(2) In the author's opinion, the ability of the preservative to penetrate the wood during treatment is given, in practice, too little consideration. All toxicity data show that both zinc chloride and coal-tar creosote are powerful fungicides, and that small quantities of them will inhibit decay. It is good practice, therefore, to diffuse the preservatives thoroughly through the tie so that as many of the wood cells as possible will be poisoned. A tie might contain 10 or 12 lbs. of creosote per cu. ft. and yet be poorly treated if the oil is not well diffused; in fact, not nearly as well preserved as a tie having only 4 or 5 lbs. of the oil per cu. ft., but with the oil uniformly and deeply distributed.

It is well known that water solutions will penetrate wood more easily and thoroughly than oils; for example, in making what are called the "penetrance tests" at the Forest Products Laboratory it took about three minutes to force zinc chloride solutions through 6 in. of hemlock parallel to the grain, while creosote took over 30 minutes. Again, under similar conditions in treating red oak and maple ties we forced about 50 per cent. more by volume of zinc chloride solution into them than we did coal-tar creosote. Any process which aims to impregnate ties with only a certain amount of preservative irrespective of the penetration secured is, in the author's opinion, operated on an incorrect basis; and any specification which will enable ties to be treated in this manner is a poor specification. In treatments with zinc chloride I believe a strong preliminary vacuum should be drawn, and the solution admitted to the cylinder without breaking the vacuum, after which pressure should be applied and held to "refusal." The absorption of dry salt can then be controlled by varying the concentration of the solution rather than by varying the amount of solution forced into the ties. Unfortunately, this simple treatment can not be used with creosote (except with certain resistant ties) because too much oil would be absorbed and the treatment would become too expensive.

(3) Permanency, as applied to preservation, involves two phenomena, volatilization and leaching. Zinc chloride under conditions of use is non-volatile. Creosote, on the other hand, evaporates from the tie. The rate at which it evaporates depends on many conditions, such as its composition, method of injection, atmospheric conditions during seasoning, etc. This objection to creosote has led in some cases to the use of tar as an adulterant, the idea being that such a mixture will hold in the tie the more volatile constituents of the oil. It is quite probable that tar will do this, but there are strong objections to such practice, and it is the author's opinion that it should be adopted only after we have secured much more convincing data than we now have.

Creosote is practically insoluble in water, while zinc chloride is readily soluble. From tests made in the Forest Products Laboratory it appears, however, that certain amounts of zinc chloride can not be leached out of wood even by very severe soaking. Just how much of the zinc chloride thus remains is not known to the author, but tests on this point are now under way at the laboratory. It is claimed that the leaching of zinc chloride in ties can be retarded by air-seasoning them after treatment, or by coating them with an oil. I have no conclusive data on either of these claims.

(4) With decay largely eliminated from properly preserved ties, and with the tonnage of our roads constantly increasing, the problem of prolonging the life of ties from rail and spike cutting is becoming more and more acute. Obviously, a preservative which will decrease the strength of ties when injected will be subject to serious criticism. Tests made by the Forest Service some six years ago on loblolly pine ties indicate that the presence of zinc chloride did not weaken the wood under static loading, but tended to make it brittle under impact, while no decrease in strength was noted for ties treated with creosote. Tests made since then indicate that both preservatives weaken the wood, although, if *properly injected*, the weakening thus caused is too small to be of practical importance. In one case a decrease of 40 per cent. in the bending strength of wood creosoted by a commercial plant was, however, observed.

(5) Some pieces of flange steel of equal dimensions, weight and quality were immersed, respectively, in coal-tar creosote and a 6 per cent. solution of zinc chloride for three weeks and constantly heated at 98 deg. C. At the end of this time the steel in the creosote lost .0064 gram, while that in zinc chloride solution lost 1.4636 grams. Of course this was a very severe test, not comparable to what takes place in the track; but even at atmospheric temperatures the corrosion of steel spikes and plates in contact with zinc-treated ties is probably greater than with creosoted ties. Whether it is of sufficient intensity to be a real detriment is not known to the author. The consensus of opinion among those who claim experience seems to be that if the zinc ties are properly seasoned before placing in the track the corrosion is of no appreciable consequence.

The presence of zinc chloride in wood is very liable to decrease the resistance of the tie to the passage of an electric current; consequently, if the flow of current is away from the track a marked corrosion of the spikes will occur. This action may, however, take place in untreated ties, especially when wet. Zinc chloride, being deliquescent, tends to keep the ties moist, while creosote tends to waterproof them; hence deterioration of spikes subject to the passage of electric currents is more likely to take place in ties treated with zinc chloride than in those treated with creosote.

The electrolytic action of zinc chloride and creosote in ties is a subject about which much discussion has occurred, particularly in connection with the operation of automatic block signals. The most accurate tests known to me, bearing on this subject, were made by J. T. Butterfield, of Purdue University, in 1910. His tests concluded that ties treated with creosote offer greater resistance than those treated with zinc chloride, and less resistance than untreated ties, as follows:

| Kind of Wood. | How Treated. | Ratio of Resistance (Treated to Natural). |
|---|---|---|
| Loblolly pine | Full cell process | 0.34 |
| Shortleaf pine | Full cell process | 0.79 |
| Red oak | Burnett process | 0.16 |

It is the experience of several signal engineers that zinc-treated ties will cause trouble with the block signals if they are placed in the track unseasoned, or if the length of blocks is too great. A shortening of the circuit to about 1,000 or 1,200 ft. has, in many instances, remedied these difficulties.

(6) A discussion of all factors finally simmers down to a discussion of cost. Because of the scarcity of authentic service records generalities must still be used. The numerous test tracks now placed throughout the country will, it is hoped, furnish us with accurate data upon which to base decisions. Quoting from a report of the Wood Preservation Committee of the American Railway Engineering Association: "Creosoting at present can not be relied upon to preserve ties more than 15½ to 19 years, an absolute maximum, unless the ties are protected against mechanical deterioration. If badly injected they perish from decay in 5 to 12 years. Burnettizing, when well done, can be relied upon to preserve ties from 10 to 14 years. There are great differences in the thoroughness with which the work can be done."

From records at hand it is assumed that a tie which, in an untreated condition, would last 5 years, when properly treated with zinc chloride will last, on an average, 12 years, and with creosote 17 years. The cost of the tie untreated is assumed as 45 cents; the cost of creosoting, 30 cents; the cost of Burnettizing, 15 cents, and of placing in the track, 15 cents. We then have:

Cost of untreated tie in track, 60 cents.
Cost of Burnettized tie in track, 75 cents.
Cost of creosoted tie in track, 90 cents.
Life of untreated tie in track, 5 years.
Life of Burnettized tie in track, 12 years.
Life of creosoted tie in track, 17 years.

From these values, figured at 5 per cent. compound interest, we find:

Annual cost of an untreated tie, 13.86 cents.
Annual cost of a Burnettized tie, 8.40 cents.
Annual cost of a creosoted tie, 8.01 cents.

And if figured without interest:

Annual cost of an untreated tie, 12 cents.
Annual cost of a Burnettized tie, 6.25 cents.
Annual cost of a creosoted tie, 5.29 cents.

From which it may be deduced that both preservatives are very economical to use in comparison with untreated ties, and that of the two, creosote is ultimately slightly cheaper. Under the assumptions here made zinc-treated ties must last about 12½ years in order to have the same annual charge as creosoted ties, while the creosoted ties must last 15½ years to have the same annual charge as the zinc-treated ties. The author leaves the reader to manipulate these figures in any way he sees fit.

(7) The zinc chloride produced in the United States is, for a commercial product, extremely uniform in its composition and the quality can be readily duplicated and obtained. Creosote, on the other hand, varies considerably in its composition, and is not easily secured in satisfactory grades. The American Railway Engineering Association recently drew up three specifications for creosote to be used in tie preservation, and more discussion has taken place over what kind of an oil should be used than over any other feature of wood preservation. It is the author's opinion, however, that these conditions are changing for the better and that the future looks bright.

(8) Zinc chloride is non-inflammable; creosote is inflammable; hence a zinc chloride plant presents a lower fire risk than a creosote plant. Zinc chloride-treated ties can be considered more fire resistant than untreated ties. When freshly treated, creosoted ties are easily ignited, but their resistance to inflammability increases as their seasoning progresses. Inflammability tests gave a temperature of ignition for zinc-treated wood of 287 deg. C., 19 per cent. of the wood, by weight, being burned. Freshly creosoted wood tested under the same conditions ignited at 176 deg. C., and 40 per cent. of its weight was burned. When, however, it was air-seasoned for 90 days after treatment the temperature of ignition was 216 deg. C., and the loss in weight 27 per cent.

(9) Zinc chloride solutions can be readily handled at much lower temperatures than coal-tar creosote and do not present the many difficulties of heating that accompany the operation of creosote plants; on the other hand, they cause a great plant depreciation, due to their corrosive action. Several cases have come to my attention where trouble was experienced in getting track men to handle creosoted ties, supposedly on account of their disagreeable nature and their effect on the health of the men. Such objections can, however, be avoided. I have heard of no complaints against zinc-treated ties in this connection.

(10) The presence of creosote in the ties can be detected more readily than the presence of zinc chloride and a knowledge of the depth of penetration is highly important. A chemical analysis of the treated ties is not feasible for daily use, so that the best method of detecting the depth of penetration in zinc-treated ties is to cut a section and apply chemicals to produce color changes, or to heat the freshly-cut section in an oven above the boiling point of water. However, a careful inspection of the treating plant and process is worth as much, if not more, than a critical examination of a few ties.

### SUMMARY OF RESULTS.

All the factors discussed above show that there are good grounds for hesitating in the selection of a preservative to be used in treating ties, and that the conditions peculiar to each road, or even parts of the same road, should affect such a decision. No sweeping generality can have much practical significance. The more noteworthy points brought out by this study are:

Zinc chloride and coal-tar creosote, when used under normal conditions, are both effective preservatives of cross-ties, and there is little choice between them as far as annual charges are concerned.

Creosoted ties in general cost initially more than Burnettized ties, the cost of treatment being from about 2 to 3 times as great.

Creosoted ties last, on an average, longer in the track than Burnettized ties, hence require less frequent renewals and changes in the roadbed.

If creosote advances appreciably in price it will very probably result in stimulating the number of ties treated with zinc chloride.

### DISCUSSION.

E. B. Fulks, American Coeosoting Company, thought that the evaporation of creosote is not serious as only a small portion of the oil disappears and this is confined to the outer surface of the tie. Sufficient oil still remains to prevent decay. Experiments with evaporation are usually greatly accelerated as the test samples are exposed to the air on all sides while with ties only one surface is exposed. Realizing that this evaporation does take place, some men mix certain proportions of high grade tar with the creosote, which tar acts as a filler near the outer surface of the timber to retard this evaporation. He defended the use of this tar as an aid to creosote and not as an adulterant.

W. F. Goltra advocated the consideration of crude oil on the same basis as zinc chloride and creosote, believing it to be equally efficient as a preservative with the other two materials. He questioned Mr. Weiss' assumptions as to the average life of creosoted ties, giving statistics to show that with the treatment of 22 lbs. per tie which Mr. Weiss considered, a maximum life of 10 years was all that could be expected. On this assumption the comparison of annual charges for the two methods would show an advantage for zinc chloride of 2½ cents.

Walter Buehler, Kettle River Company, said that experience showed that ties saturated with petroleum are effectively preserved against decay but when allowed to dry out, lose their immunity from decay.

G. E. Rex, A. T. & S. F., in reply to questions regarding the results secured from crude oil, said that of 14 ties treated experimentally in 1901, two have decayed up to the present time, although four others have been removed for examination. The two which decayed were loblolly pine and the fact that such decay appeared would indicate that crude oil has not the necessary antiseptic qualities.

H. F. Weiss said that his objections to the use of tar in creosote are that it has not been fully tested in service, that it reduces the penetration in the wood and that it collects on the surface of the ties, making them difficult to handle.

## EXPERIMENTAL TREATMENTS, WITH REFERENCE TO THE EFFECT OF INITIAL AIR PRESSURE ON PENETRATION OF CREOSOTE.

BY R. S. BELCHER,

Chemist, Texas Tie & Lumber Preserving Co., Somerville, Tex.

The question of the extent to which initial air pressure retards penetration of creosote oil, has been of considerable interest to me, and to satisfy my curiosity I made six runs in the experimental cylinder, with and without initial air pressure. Sawed and hewed longleaf, shortleaf, and loblolly pine ties were used, all the ties having been seasoned five months. It was one of the objects of these test runs to ascertain the absorption and penetration of two runs having the same differential; that is, one having, say, 75 lbs. oil pressure and no initial air pressure, and the other having 100 lbs. air pressure, and 175 lbs. oil pressure, the excess of oil pressure over air being the same in both cases.

In Run 1, 100 lbs. oil pressure was pumped on the ties with no air pressure to oppose it except the air naturally in the wood cells, the average absorption of this run being 54.60 lbs. per tie, or 16.72 lbs. per cu ft. In Run 2, 75 lbs. air pressure was used

to oppose 175 lbs. of oil pressure, the absorption being 21.15 lbs. per tie, or 6.56 lbs. per cu. ft.

Run 3 had an initial air pressure of 100 lbs. and an oil pressure of 175 lbs., while Run 4 had no initial air pressure and 75 lbs. oil pressure. The absorption in Run 3 averaged 9.10 lbs. per tie, and 3.37 lbs. per cu. ft., while in Run 4 the absorption was 20.50 lbs. per tie or 7.68 lbs. per cu. ft.

Run 5 had the same treatment as Run 2, namely, 75 lbs., air pressure and 175 lbs. creosote oil pressure. The absorption on this run averaged 11.30 lbs. per tie or 4.24 lbs. per cu. ft., being less than the absorption of Run 2 on account of the fact that the ties treated were heart ties, while Run 2 was composed of sap ties. The excess of oil pressure over air pressure in Run 5 was 100 lbs., as compared with 75 lbs. in Run 3.

In Run No. 6 it was the object to see how quickly 5 lbs. per cu. ft. could be put into the ties, and what kind of penetration would be secured, no initial air being used. When sufficient creosote had been pumped from the measuring tank to give 5 lbs. per cu. ft., the treatment was stopped. This took exactly five minutes from the time the cylinder was filled, and the pressure had gone up to 100 lbs. The cylinder was then immediately drained and a vacuum drawn to dry the ties. This run had an absorption of 15.60 lbs. of creosote per tie, or 5.13 lbs. per cu. ft. The penetration was considerably better than was expected, but it was very uneven and the sap wood was not entirely treated.

It would seem that while initial air pressure lowers the amount of creosote absorbed by the timber, it interferes with the penetration very slightly, if at all, thus securing the maximum penetration with the minimum quantity of oil, and that the benefit derived from initial air pressure is greater proportionately in timber with a large percentage of sap wood than in timber which is mostly heart wood. This being the case, it would follow that best results can be expected in so far as maximum penetration with small amounts of oil is concerned, by using reasonably high oil pressure, and as high air pressure as possible, and yet leave in the timber the required amount of creosote.

DISCUSSION.

B. Kuckuck, of C. Lembeck & Co., advocated treating timber to refusal to insure thorough treatment. This is expensive when creosote is used and it has been diluted with other materials, but timber filters liquids. By using initial air pressure it is possible to dilute the creosote with air and so distribute it throughout the timber at moderate cost.

G. B. Shipley, Pittsburgh Wood Preserving Company, said that considerable experience had shown him that better penetration was secured with an initial pressure than with full cell treatment. This initial pressure varies with the different kinds of timber.

## THE REQUIREMENTS FOR SUCCESSFUL TIMBER TREATMENT.

BY HERMANN VON SCHRENK,
Consulting Timber Engineer, St. Louis, Mo.

Timber treatment has grown so rapidly in the United States that the amount of material treated every year is ten times what it was seven or eight years ago, and the number of men engaged in the industry has correspondingly increased. As the use of treated wood has increased, some facts as to the treatment of timber have become more or less axiomatic. Briefly stated, in order to get good results from treated timber the following points must be observed: Only perfectly sound timber should be treated. In order to obtain the best results, properly seasoned material should be used. A good preservative is essential to long life. Proper injection as to quantity and penetration is essential. Proper subsequent handling of the timber is essential.

In my investigations I have found that the premature failures of so-called treated timber were almost without exception due to the non-observance of one or more of the above principles. I am perfectly sure that in the early days a good deal of timber was treated which was sap rotten. It was not realized ten years ago, as it is today, that timber may be very badly decayed in the interior and yet show absolutely no evidence on the outside. With the best intentions, therefore, many sticks of wood were doubtless treated which we would unhesitatingly throw out today. Many of the failures were, however, due to the fact that timber was treated because of certain contract requirements and in spite of a better knowledge of the person responsible for the actual treatment. The lessons to be drawn from failures are very obvious, and I believe we should take cognizance of them, particularly in view of more thorough knowledge of all the factors surrounding the operations which make for successful treatment.

While there is no doubt very general agreement among the men engaged in the timber-preserving industry as to the fundamental conditions enumerated above, we all know that frequently, under stress of business circumstances, they are not adhered to. The consumer frequently makes demands which cannot be fulfilled, and if they are, they are bound to result in speedy and ultimate failure.

The inspection of material before treatment should be made with greater care. I believe that every treating company should be empowered to refuse to treat material which it knows to be defective. In other words, I do not think that anyone is warranted, under any circumstances, in treating material which he knows to be unfit because of various defects. A defective stick was never improved by any kind of treatment.

The same holds true for improperly seasoned material. The excuse is frequently given, in demanding treatment of absolutely green material, that emergencies have arisen which necessitate such treatment. Unfortunately, with the increased use of timber in its various forms, the tendency to require and do such rush work seems to be increasing. It is frequently inconvenient to wait six or eight months, or more, to properly season material; besides, it costs considerable for interest charges. What has been said about the inspection of the material before treatment holds equally for the preservative used and the manner of treatment.

I may be treading on delicate ground when I refer to the relation which should exist between a treating company and its customer. I have no hesitation, however, in saying that I believe it to be the duty of the man who knows how timber should be treated to protest vigorously against any requirements which necessitate his treating a customer's material in a manner which he knows to be wrong. I wish to protest against the tendency which requires the actual treating operation to be conducted in accordance with any demands which may be made by the customer, because not only does this give disappointing results so far as any particular piece of work is concerned, but also because it reacts on the company doing the work and on the industry as a whole. The people as a whole are apt to forget when the piece of so-called treated material fails, that that particular piece of material was treated under unusual conditions, no matter how much these conditions may have been justified at the time. I wish to protest against the tendency to do rush work under "necessity." We might as well face the problem now and say that successful treatment of timber can only be accomplished by observing certain laws, and that when one or more of these laws are broken, the consequences will be swift and certain. I know that there are difficulties which both the consumer and the timber-preserving company have to meet, and, as in all other affairs, that there are emergencies which will warrant doing exceptional things. I know also, however, that frequently requirements are made in the best of faith which it is hard to object to. I believe it would be perfectly proper for this association to give expression to some of the sentiments herein expressed. I would favor the passage of some resolution emphasizing the necessity for a careful observance of the principles referred to.

DISCUSSION.

C. G. Crawford, American Creosoting Company, and J. H. Waterman, C. B. & Q., strongly endorsed the position taken by Dr. Von Schrenk, the latter stating that unfit ties are very carefully culled at the Galesburg plant. These ties are used for steam shovel tracks and sill ties.

J. B. Card and other members favored thorough seasoning of all ties received at the plants green, believing air seasoning cheaper than steaming.

## PRESERVATION OF LUMBER FOR CAR CONSTRUCTION.

By J. H. Waterman,

Supt. Timber Preservation, C. B. & Q., Galesburg, Ill.

Observation leads me to make the statement that treating lumber with creosote for car construction will be necessarily limited, on account of the fact that it is impractical to paint timber after it has been creosted. Most roads in this country have a standard color for their cars, and they would not want to change that color to black in order to please the wood preservers. If any road should desire to change their stock car color to black, then the creosoted timber would be ideal, for the cars would be permanently painted, providing the timber was framed before it was treated.

So far the Burlington has treated only car sills and car decking. We have treated a total of 23 runs of fir car sills with the following results:

Average absorption, per cu. ft., 11.41 lbs.
Board feet treated, 326,204.
Average steam pressure, 15 lbs.
Average time steamed, 2 hours 23 minutes.
Average initial vacuum, 23 in.
Average time initial vacuum held, 1 hour 37 minutes.
Average solution pressure, 175 lbs.
Average time solution pressure held, 17 hours 26 minutes.
Average final vacuum, 20 in.
Average time final vacuum, 1 hour.

To date we have treated 39 runs of fir car decking as follows:

Average absorption, per cu. ft., 14.33 lbs.
Board feet treated, 1,013,472.
Average steam, 15 lbs.
Average time steamed, 57 minutes.
Average initial vacuum, 24 in.
Average initial vacuum held, 1 hour 6 minutes.
Average solution pressure, 175 lbs.
Average solution pressure held, 13 hours 10 minutes.
Average final vacuum, 21 in.
Average time final vacuum, 1 hour.

In the sap wood of the sills we got a thorough penetration; in the hardwood not to exceed 1 in. all around. The car decking, when dry, was thoroughly penetrated with creosote. This car decking is 1¾ in. thick.

We feel that it is not only practical, but that it pays, to treat the car sills and car decking for stock cars. It would be impractical to treat car decking for box cars on account of the odor. They could not be used for flour and many other lines of merhandise, which would absorb the odor. For stock cars it also acts as a disinfectant, and from that point, I believe, it would be effective. There is no question but that it lengthens the life of the timber very materially; how much I am not able to say, for we have only practiced treating car sills and decking for about one year. The treated lumber is being used as sills in all new stock cars that we build with wooden sills, and as decking in all of them.

DISCUSSION.

G. B. Shipley advocated the empty cell or zinc chloride processes as cheaper and giving life equal to mechanical life.

## HISTORY OF WOOD PRESERVATION.

By W. F. Goltra,

President, W. F. Goltra Tie Co., Cleveland, O.

Numerous ingredients have been proposed for the preservation of timber from decay. The chief ones which have been tried, some of which have been recommended, are as follows:*

Acids: sulphuric, tar, vitriolic; carbonates of barytes, potash and soda; chlorides of mercury, sodium and zinc; sulphates of alumina, barytes, copper, iron, lime, magnesia, soda, zinc; muriate of soda; nitrate of potash; fish, whale and other animal oils; linseed, cedar and other vegetable oils; petroleum and crude oils and other mineral oils; oils from distillation of tar obtained from coal (creosote), wood and petroleum; molasses and low syrups; wax, glue; resins and gums of different kinds; quick lime or hydrate of lime.

Active progress in timber preservation dates from the year 1832. During this year Mr. Kyan patented in England the process of corrosive sublimate, or bichloride of mercury, for preventing decay of timber, although Sir Humphry Davy had previously used a weak solution of sublimate, to be used as a wash where rot made its appearance. Corrosive sublimate has the strongest antiseptic properties among metallic salts; therefore its action is highly preservative, but it has several disadvantages. This process is usually called "Kyanizing," after the name of the inventor. It consists of steeping the wood in a solution of corrosive sublimate, the strength of which is usually 1 lb. of salts to 99 lbs. of water. The work is usually performed in open masonry pits, without pressure, because of the corrosive effects of the chloride of mercury on metal. It is a very slow process compared with those in which the wood is impregnated under pressure. The process is still used in a small way for impregnating railroad ties in Southern Germany, and there are a couple of small plants in our New England States. Kyanizing was introduced in England in 1836, but has gone out of use long ago. The process is suitable for treating timbers on a small scale only. Chloride of mercury corrodes iron and steel, and therefore retorts made of this material are impractical. Simple immersion being found imperfect as a means of injecting the sublimate, Mr. Kyan made an attempt to improve the efficiency of the solution by forcing it into the wood by pressure process. Wooden closed tanks were substituted for the open ones and forcing pumps were added to the equipment.

In 1838 Sir William Burnett, formerly director general of the medical department of the English navy, made known his invention which consists of destroying the tendencies of certain vegetable and animal substances to decay by submitting them to the action of chloride of zinc. The degree of dilution recommended by Mr. Burnett is one part by volume to fifty parts of water. At first the method of impregnation was by immersion in open tanks. In 1847 a powerful cylinder of Burnett's construction, hermetically closed, was laid down adjoining the sawmills in Woolwich dockyards. With this it was possible to treat large timbers and to apply a pressure as high as 140 lbs. per sq. in and by creating a vacuum, extract the moisture from the pores of the wood, which were afterwards filled with chloride of zinc. This process is usually called "Burnettizing," after the name of the inventor. Chloride of zinc is not considered as strong an antiseptic as chloride of mercury, and even considerably less than sulphate of copper, but it is much cheaper than either of these, being, in fact, the cheapest of all the preservatives. In general, no reaction takes place between chloride of zinc and iron when spikes are driven into zinc-treated ties, but the drawback in its use is that it is, like chloride of mercury, easily soluble and therefore apt to leach out of the wood impregnated with it. The substance is, therefore, unsuitable for timber to be used in water, such as piling and dock timbers, but it is an excellent preservative for railroad ties and other timbers not constantly exposed to the action of water. This process is in use on many railroads in Europe and America.

Modifications of zinc chloride processes have been proposed to correct the principal objection above mentioned. One of them is known as the B. M. process (Bruning-Marmetschke process for preserving wood, H. Bruning, manager, Schopfurth, Germany), which consists of adding aluminum sulphate to zinc chloride, it being claimed that zinc chloride salts are made more permanent in the wood.

The modern creosoting process was invented by Mr. John

*The details of the earlier processes, most of which were never developed successfully, were given at considerable length in the first third of the paper.

Bethell, of England, and patented by him in 1838. Mr. Bethell's patent relates more particularly to the method of treatment than to the kind of preservative employed. This consists of the use of closed vessels to contain the timber, in which a vacuum was first produced, the timber being partially surrounded by the chemical, and being preferably placed in an upright position. It was then fully surrounded by the chemical and pressure applied to force it into the wood. Mr. Bethell mentions dead oil of coal tar as one of the preservatives which can be used.

Previous to the time of Mr. Bethell's invention practically all impregnation of wood was accomplished by immersion in open tanks or open boilers, and it may be said that he is the inventor of what is commonly known today as the pneumatic pressure process—or, at any rate, he was one of the first to use this process to any appreciable extent.

Rutger's zinc-creosote process, patented in Germany in 1874, consists of four operations: steaming the timber; producing a vacuum and admitting the preservative fluid; applying pressure, and applying a final vacuum to hasten the drying of the material. The preservative is a mixture of creosote oil and zinc chloride. A modification of this process, known as the Card process, has been employed at several plants in the United States. It consists in forcing an emulsion of zinc chloride and creosote into the wood at one operation. J. D. Card proposed injecting a small amount of tar oil, then immediately thereafter injecting a solution of zinc chloride. He claimed that by this means he secured a much better distribution of the oil in the wood than was possible with the ordinary injection of the same amount of oil and at the same time thoroughly protected the interior of the stick with zinc chloride. Mr. Card introduced the Wellhouse process on the Atchison, Topeka & Santa Fe at the Las Vegas, N. M., works built in 1885. This process consisted of the injection of zinc chloride, followed by injections of solutions of glue and tannin, the object of the two latter being to plug up the ducts of the timber by artificial leather formed by the glue and tannin. This treatment has been in use in this country for a number of years with satisfactory results.

Another treatment used considerably in this country is the Allardyce process, which consists of an injection of a 2 per cent. solution of zinc chloride into the wood, followed immediately by an injection of about 3 lbs. of creosote oil per cu. ft. A number of ties treated in this way by the International Creosoting & Construction Co., at Beaumont, Tex., were laid in track in 1900, and a large percentage of them are still in service.

## THE PIECEWORK OR UNIT SYSTEM OF HANDLING TIES AND TIMBERS.

By W. W. Eldridge,

General Piecework Inspector, Chicago, Burlington & Quincy.

Our company has been using the piecework system of handling ties and timbers at both our plants for several years with what we consider the best of results.

The object of piecework is to get one dollar's worth of labor for one dollar, and to give one dollar for one dollar's worth of labor, or in other words, to increase the efficiency in handling ties and timbers so as to get the largest possible output at the least cost. The advantages of the piecework system are numerous. In the first place it reduces by approximately one-third the number of men required to do the work, and hence makes a corresponding decrease in the amount of supervision needed. It gets the "cream" of the laborers. There is no place for the "drone" in the piecework system. It systematizes the work and assists materially in accounting, figuring costs, etc. It places each individual workman in business for himself, and enables him to secure pay for what he does. Being paid for what he does, it is natural for him to combine mental ability with physical strength, in order to accomplish all possible. Knowing that he is getting paid for what he does, and that in proportion as his efforts are increased his earnings are increased, he is able to make better wages than his fellow-workmen in other lines on a day-rate; hence he is satisfied with his job at all times, and when a "shortage of labor" comes, he will stay with you. All of these advantages tend to promote efficiency.

The installation of the piecework system is no small task. A great deal of tact and good judgment must be exercised, and unless it is established on good business principles it will be a failure rather than a success. Be open with your men in everything you do in connection with their work, as it is of the utmost importance that the men fully understand what you expect of them, and what they can expect of you in return. You must have confidence in your men and they in you to obtain the best results. Every detail should be fully explained to them.

The installation of the piecework system would need to be worked out to fit conditions peculiar to each individual plant, hence it would be useless for me to attempt to outline what rates should be applied, but there are several important underlying principles that should apply to all.

Select a competent foreman, wide awake and energetic, familiar with every detail of the work, and thoroughly acquainted with the most practical way to handle ties and timbers so that he can impart his knowledge to his men. He should not be a slave driver, but should be firm and diplomatic in all his relations with his men. The men should understand that his word is law, but if for any reason they deem his demands unreasonable they should be at liberty to put the case up to the general foreman or other higher authority for final decision. In my opinion the superintendent or manager personally should make the final decision, if necessary to carry it that far.

Care should be exercised in perfecting an organization to place the men to the best advantage, and to see that there are no more men in the gang than needed, and yet enough to handle the work without delay to other parts of the organization.

Price schedules should be made to cover every operation. These schedules may be based on any of the following units, depending entirely upon your own views and the existing conditions:

Ties; per tie, or per tram loaded.
Lumber, switch ties and crossing plank; per 1,000 ft. B. M.
Piling; per pile, or per lin. ft.

We have found the following a very good plan:

Unloading and storing ties on ground, per tie.
Loading trams for treatment; per tram.
Unloading treated ties from trams to cars; per tram.
Unloading treated ties from trams to ground; per tram.
Filing, when handled with derrick; per pile.
Piling when handled by hand; per lin. ft.
Paving blocks; per sq. yd.
Lumber; per 1,000 ft. B. M. in all cases.

In wording the schedules particular attention should be given to the phraseology to see that it is clear, concise and easy to understand. All the work which the men are expected to perform under any schedule should be fully covered. In handling ties and lumber of all kinds a distinction should be made between hard and soft wood, as pine or fir weighs approximately 3 lbs. per ft., while oak weighs 5 lbs. per ft. You would not expect any man to handle 5,000 lbs. for the same price as 3,000 lbs.

A competent man should be selected to make the schedules and establish the rates of pay. To get the best results he should have a knowledge of handling men and material. He should be competent to recommend practical changes or improvement of conditions, tools or other devices that will facilitate the handling of the ties or timber. Often a dollar judiciously spent to improve conditions means many in return. In establishing prices it is important that all the facts and figures bearing on the operation be accumulated in order that prices may be established on an intelligent basis. To accomplish this the party getting the information should be on the ground personally, to watch the operation from start to finish, and to make notes as to the number of men, kind of material handled, how handled, time consumed by each man, degree of efficiency, or anything else that would have an important bearing on the word-

ing of the schedule or the base rate. Prices should be based on three things; the authorized hourly rate, degree of efficiency obtained under the day rate system, and the conditions and tools furnished.

All prices should be made on a basis that is fair to the employer and the employee. Once a price is established it should never be changed unless there is a change in conditions. Suitable blanks should be provided for keeping the time and checking material in and out. These will be turned in to the timekeeper daily.

In establishing the piecework system, it is a good plan to start with one gang. Advise them daily of their earnings and arrange it so that the rest of the men working on a day rate will know what this gang is earning. They will immediately begin to get interested and ask for the piecework system, and in a short time the entire force will be working on the piecework basis.

Foremen should be on a monthly basis. In no case should a foreman have supervision over more than twelve men, and eight or nine men is better, in my opinion, when handling ties or lumber by hand. The duties of the foreman are to instruct his men what to do, give them the benefit of his experience in handling material, keep them supplied with work at all times, see that it is properly done, and keep track of their time and the material handled, checking it personally in all cases.

When unloading ties to season, also loading trams for treatment, each man works as an individual. When handling treated ties the men generally work in pairs or gangs of three, each man getting an equal proportion of the earnings of the gang. If a man is taken out of the gang during the day and another put in his place, the foreman should make proper record so that the earnings can be properly apportioned. When unloading ties to season at our plants we make no effort to sort them. The sorting as to kind of wood and grade is done when loading them on trams. When unloading switch ties by hand we find a gang of four men the best, and when handling switch ties, piling and lumber with a locomotive crane, three men in addition to the engineer. In all cases I would advocate the same rate from start to finish of an operation, unless some unusual condition arises. The men get the same for the last tie as for the first.

In storing ties to season in eight to one piles, the maximum height of the pile should be 16 to 18 ft. Treated ties when piled on the ground should be in solid square piles eight to ten ft. high.

Someone has said that the efficiency of a timber-treating plant should be based on the number of retort hours worked out of the total possible retort hours. In obtaining efficiency in plant operation the fact must not be lost sight of that good and effective treatment is the first or primary object, and in securing such treatment your supervision, organization and system of handling must be the best possible. This is what we claim to have under the piecework system. During the year 1912 at our Galesburg plant each of the three retorts were in actual operation 98¾ per cent. of the time. This means that out of a total of 7,488 possible retort hours for each retort they were operated 7,394.4 hours, holidays excluded.

DISCUSSION.

George E. Rex, Santa Fe, told of the universal application of piecework in Santa Fe plants. In the Albuquerque plant five Mexican laborers who would earn about $35 a month at day rates now earn from $100 to $125 a month on a piecework basis.

W. A. Fisher, Atlanta Coast Line, reported the use of a piecework system on that road, the laborers being negroes. The men can often finish a good day's work early and go home better satisfied.

Several members spoke of the difficulty in fixing a fair piecework rate for handling material with machines. A representative of the Philadelphia & Reading told of the handling of ties by locomotive cranes in its plant, for which no piecework rate has been established.

## TESTS TO DETERMINE THE EFFECT UPON ABSORPTION AND PENETRATION OF MIXING TAR WITH CREOSOTE.*

By F. M. Bond,
Forest Products Laboratory, Madison, Wis.

Adequate depth in the penetration of a preservative is recognized as of fundamental importance in the wood-preserving industry, and this has been the principal goal of many preservatives and processes. Recognizing the importance of this factor, there have been developed at the Forest Products Laboratory an apparatus and method of testing which render it possible to make accurate comparisons of the penetrating qualities of a preservative, considering the great variability to be found in wood. An investigation has been begun upon some of the factors which are believed to determine largely the penetrating power of creosotes and mixtures of creosotes and tars into specimens of a single species of wood.

Clear heart commercial longleaf pine specimens, approximately 2 by 4 in. in cross section and of various lengths, were used A hole one inch in diameter and approximately one inch deep was bored in the center of one 4-in. face of each specimen. The specimens were cut in series, each set being of adjoining material, comprising as nearly as possible different portions of the same growth rings. All of the specimens were air dried under cover before being tested and contained a very small amount of moisture when they were treated.

The impregnating oils were all derived from or consisted of one or more of the following: A commercial creosote, a gas-house coal tar containing approximately 30 per cent. of free carbon and of 1.273 specific gravity, a by-product coke-oven coal tar containing approximately 16 per cent. of free carbon and of 1.232 specific gravity, and a by-product coke-oven coal tar containing approximately 6 per cent. of free carbon and of 1.184 specific gravity.

It was the purpose to use oils as nearly as possible like those used in practice. The creosote was purchased from regular stock and the tars were collected direct from the producing apparatus by a representative of the Forest Service.

The free carbon was removed from a portion of each of the tars and the amount of free carbon in the tars was determined to the nearest one-half of 1 per cent. by careful quantitative filtering. The percentage of free carbon in a given mixture was regulated by mixing in the proper proportions a tar containing the normal amount of free carbon with the tar of the same origin from which the free carbon had been removed.

The specific gravities and viscosities were obtained very accurately.

The apparatus was designed to expose the wood in the 1-in. hole to the preservative under conditions similar to those which obtain during the pressure period of the usual timber treating cylinder, except for the fact that only a given surface of the specimen under test is subjected to the impregnating oil. In order to compare the relative penetrations of the oils, at approximately 24 hours after treatment, each specimen was sawed transversely and longitudinally through the center of the hole. The fresh areas of treated wood which were thus exposed, were measured by means of a planimeter and the penetrations were determined by using these values, together with measurements of the depths of the holes in the specimens, which were obtained by the use of a steel scale.

The following series of oils for each of the three tars were tested at a temperature of 160 deg. F. and a pressure of 75 lbs. per sq. in. for their relative absorptions and penetrations in two sets of matched specimens, using tar from which the free carbon had been extracted in each case: All creosote, 75 per cent. creosote, equal parts of creosote and tar, 75 per cent. tar, and all tar.

For each of the three tars there was tested at a temperature

*The experiments described are still in progress.

of 160 deg. F. and a pressure of 75 lbs. per sq. in. a series of mixtures, each of which contained 50 per cent. of creosote and 50 per cent. of tar by volume, but different percentages of free carbon. Two sets of matched specimens were used in each series.

A series of mixtures, each consisting of 50 per cent. of creosote and 50 per cent. by volume of one of the tars containing the normal percentages of free carbon, or of one of the tars from which the free carbon had been removed, was tested at a temperature of 160 deg. F. and a pressure of 75 lbs. per sq. in., using two sets of matched specimens. This series included, of course, mixtures of each of the carbon-free and the normal-free carbon tars.

While data obtained under a given set of conditions upon well-matched specimens of wood are comparable, provided one condition only whose result is unknown be varied at a time, results from different sets of matched specimens are not necessarily comparable. Pieces of wood will behave differently when there is a variation in either the number of annual rings per inch, the ratio of the amounts of summerwood and springwood, the amount of resin present, or a number of other characteristics. Experiments upon specimens which are matched as described in this paper are in reality conducted at different points along the same piece of straight-grained wood, which is sawed into short lengths simply for ease of handling. There is, therefore, a minimum of the variability common between different pieces of wood. When the results of tests upon sets of matched specimens of diverse origin are compared, however, the variability between the wood of the two sets may be greater than the variations in the factor which is being examined, thus obscuring the results.

The data which have been obtained seem to indicate at this time the following:

The difficulty of penetration into longleaf pine of mixtures of creosote and a given tar from which the carbon had been removed was in proportion to some direct function of the amount of tar in the mixture.

There was no apparent relation between the amounts of carbon-free tar in mixtures of creosote with the three tars and the corresponding absorptions and penetrations into longleaf pine.

There was no apparent relation between the viscosities and specific gravities of mixtures of creosote with the three carbon-free tars and the corresponding absorptions and penetrations into longleaf pine.

The difficulty of penetration into longleaf pine of mixtures of equal parts of creosote and a given normal tar was in proportion to some direct function of the amount of free carbon in the mixture.

There was no apparent relation between the amounts of free carbon in mixtures of creosote with the three normal tars and the corresponding absorptions and penetrations into longleaf pine.

There was no apparent relation between the viscosities and specific gravities of mixtures of creosote with the three normal tars and the corresponding absorptions and penetrations into longleaf pine.

The free carbon appeared to occur in agglomerations of different sizes in the three tars.

There was no apparent penetration of the free carbon into longleaf pine.

The free carbon appeared to form mats of different degrees of density and imperviousness on the surfaces through which the oils entered the wood.

The tar producing the free carbon mat which appeared to be of greatest density and imperviousness was the tar in which the number of the smaller free carbon agglomerations appeared to be relatively greatest and was also the tar of which the normal amount of free carbon appeared to produce the greatest difference in penetration into longleaf pine, although this tar contained the smallest percentage of free carbon.

The tar producing the free carbon mat which appeared to be of least density and imperviousness was the tar in which the free carbon agglomerations appeared to be of greatest size, and was also the tar of which the normal amount of free carbon appeared to produce the least difference in penetration into longleaf pine, in spite of the fact that it contained the largest percentage of free carbon.

DISCUSSION.

S. R. Church, Barrett Manufacturing Company, questioned the conclusion that the penetration of a mixture of creosote and tar was in proportion to some function of the amount of tar in the mixture, and E. B. Fulk, American Creosoting Company, thought the number of test specimens too small to warrant any of the conclusions made. Both speakers emphasized the possibility of variation in other factors having concealed the true variation due to tar content.

Walter Buehler, Kettle River Company, told of an experience tending to prove that the waterproofing of wood necessary for satisfactory service of paving blocks can be secured better by treatment with a mixture of tar and creosote than with creosote alone.

C. G. Crawford, showed that the conclusions drawn should not be applied to ties of timbers containing heart wood.

## ADZING AND BORING TIES AND THE COST OF INSTALLING PLANTS OF THIS KIND.

By James A. Lounsbury,
Vice-President, Greenlee Bros. & Co., Chicago.

The folly of paying 20 to 35 cents per tie for chemical treatment and then to so mutilate the ties by hand adzing and spike driving as to greatly reduce the beneficial effect of the treatment is too obvious to require argument. Hand adzing is resorted to commonly to correct defects in the tie surface, but this is at best only a partial remedy, and its effect on the impregnated part of the tie is destructive. The advantage of having a full and perfect bearing for the rails over the whole width of the face of every tie is evident. It reduces rail cutting, decreases the danger of half moon breaks in rail bases, reduces disturbance of the ballast and gives added firmness and stability to the track. Where plates are used it is a practical necessity to give them a full bearing on the ties, as the increased surface makes it more difficult for them to properly seat themselves under traffic. If their bearing on the tie is not parallel with the bottom of the rail they increase the danger of rail breakage, as they form an anvil upon which the impact of rapidly moving loads is received. If the point of support is along one edge of the rail base only, the danger to the rail is apparent.

Many tests made by the U. S. Bureau of Forestry, by several universities, and independently by a number of the railroads, have demonstrated conclusively that common square spikes have increased holding power when driven into previously bored holes. It is unfortunate that there are almost no reliable data showing the comparative resistance to lateral pressure of spikes driven directly and those driven into previously bored holes. This is of even more importance than the resistance to vertical pull, as upon it depends the maintenance of gage and the prevention of rail spreading under high speed trains. It is probable that the resistance to flange pressure is increased in much greater proportion than the resistance to vertical pull, because the spike in a bored hole has a backing of solid wood instead of being surrounded by torn and broken down fibres, as is the case when driven directly. The use of screw spikes, of course, makes pre-boring absolutely necessary. A number of roads are already committed to this form of rail fastening, and its extended use is only a matter of time. At present probably 75 per cent. of the ties that are bored are for square spikes.

Of chief interest, however, to the members of this association, is the great advantage from a treating standpoint of having the adzing and boring of ties done before the treatment takes place. The vital points of a tie are the parts under the rails and contiguous to the rail fastenings, and this is where the impregnation should be most thorough. In air seasoning the ties become case hardened on the outside, and this hard skin is more difficult of penetration than the portion immediately beneath.

In adzing previous to treatment this more resistant portion is removed for a distance of 12 to 14 in. in length for each rail bearing. This permits the chemical to penetrate more freely transversely to the grain. The holes bored for the spikes give the chemical free entrance into the interior, allowing it to radiate from each hole by end grain penetration, thoroughly saturating these portions even when the tie as a whole is not given a heavy treatment. How much this saturation of the parts of the ties subject to earliest failure will increase their life cannot be measured until sufficient time has elapsed to allow accurate comparative data to be obtained, but there is no doubt that it will greatly increase the efficacy of the treatment and produce results far out of proportion to the cost of the adzing and boring operation. It is stated by engineers who have had several years' experience with adzed and bored ties that the saving in time and labor in putting the ties in track is sufficient to pay the cost of the adzing and boring, leaving all the other advantages a net gain.

The adzing and boring of ties has been standard practice in Europe for upwards of 20 years, and the results have proved its economy. Owing to the abundance of cheap labor in those countries, the development of machines of the highest labor-saving capacity has not been rapid. Their ties are more carefully made, and therefore machines are not required to meet such wide variations as in this country. In England the majority of ties are sawed from dimension stock and vary little in size. A range of 1½ in. difference in thickness is all that is provided for in their machines, while ours must be designed so that ties from 5 in. to 10 in. thick, and from 7 in. to 14 in. wide, may be run promiscuously. Again, their ties being practically of the same width, no provision need be made for centering so that the holes will always be properly placed in the face of the ties. With our extreme variations in width, and the fact that no two ties are alike in shape, that crooked and straight ties must follow each other through the machine, it is necessary to center each tie over the boring bits so that the holes shall be accurately placed in relation to the center line of the face of the tie. In other words, the machine must take ties as they come, of all sizes and shapes, and automatically adjust itself to variations and irregularities, without human aid and without decrease in its rate of production.

Two distinct patterns of adzing and boring machines are built for different methods of mounting. One is designed for installation on a stationary foundation; and the other, a more compact form, for mounting in a car. As more machines are specified for stationary mounting, this type is known as the standard pattern. It is more open in design and accessible in its working parts than the more compact car type. The question of which method of mounting is preferable must always depend upon yard and plant conditions, and each case must be decided on its merits. It is probably true, however, that there are more treating plants in which the stationary mounting will give the higher economy in operation than those in which the movable type will give the better results.

The location of the stationary machine in relation to the retort house, power house, etc., in the case of plants already built, must, of course, be governed by the space that may be available, because it must be made to fit into conditions as they exist. In laying out a new plant the location is subject to control, and can be made where the least switching and handling of ties will be involved.

Wherever possible the machine should be placed between the stacking yard and the cylinders, so that all ties must pass it in their movement between those points. The narrow gage tracks should be arranged so that trams from any part of the yard may be brought to the machine with the minimum amount of switching, and by-pass tracks must also be provided by which timbers not to be machined, such as switch ties, bridge timbers, piling, etc., can pass the tie machine without interfering with its supply. The tram track on the in-feed side of the machine should be about 1 ft. higher than that on the delivery side, and should run out to a spring switch, so that an unloaded tram, given a start, will run by gravity past the spring switch, reverse its direction and return on the discharge side of the machine ready to be loaded for the cylinder. The space required between these supply and delivery tracks should never be less than 32 ft. centers when the ties are to be taken from the tram and placed on the machine conveyor by hand. If the dumping hoist and the skid are employed the minimum distance between track centers is 46 ft. These dimensions apply only to the machine without the cut-off saw attachment. If the latter is required, 6 ft. should be added to the track center distances.

Where drainage will permit, the best form of foundation is to enclose a space 11 ft. x 20 ft. with a concrete wall, the interior being excavated and a cement floor laid. The side walls should be 7 ft. to 8 ft. high to give good head room below, as in the basement so formed the 50 horse power motor for driving the machine is placed, together with the shavings exhaust fan. The top of the foundation should be about 3 ft. above the grade line, making the actual excavation only about 5 ft. deep. Steel I-beams and a 4 in. plank floor form the support for the machine. The weight of the latter is 20,000 lbs. This form of foundation is not always necessary, but is the most advisable when conditions permit.

The smallest building which will accommodate the machine and appliances is about 25 ft. square. This, however, leaves the men unloading trams on the in-feed side, and the tram loaders on the discharge side exposed to the weather. It is better to provide a building 25 to 30 ft. wide, and long enough to span both the supply and delivery tracks so that the tie handlers may work under cover. Of course, in the South the matter of protection is not so important, and can be arranged to suit local conditions.

One of the most important facts to be borne in mind in considering the installation of a machine of this kind is that, in order to bring the cost of the adzing and boring operation down to the lowest point it is necessary that it be operated continuously at its full capacity, and that there shall be no irregularity in the tie supply nor any interference with the quick handling of trams at either side of the machine.

Machines designed for mounting in cars perform the same operations in practically the same way, but, as stated before, the dimensions are held down in order to bring them within the limit of width of a wide box car, having extra wide doors through which the conveyors extend. The original installations (two machines on the Santa Fe and one on the Northern Pacific) were all of this type. The car used for this purpose should be of steel under-frame construction, 40 ft. long, 9½ to 10 ft. wide, of 40,000 lbs. capacity, and not less than 9 ft. high in the clear. The cars are usually made self propelling from the same source of power which drives the machine, a clutch being provided by which the machine is disconnected and the car axle drive thrown into gear when the car is to be moved. As the car is commonly designed to move only from stack to stack in the tie yard only, the speed is kept down to about three miles an hour.

The kind of power to be used in these movable plants is often a somewhat troublesome problem. Electric drive is by far the most reliable and satisfactory if it is available. In yards using electric switching locomotives and strung with trolley wires the application of electric power is easy, but where this is not to be had, some other power must be used, usually a self-contained gasolene engine of about 60 horse power installed in the car with the machine. This gives satisfactory results, but requires more careful management than would be necessary with an electric motor.

The track arrangement in a yard already laid out is, perhaps, the most important factor in determining the comparative merits of the stationary and car mounting. The usual system, a three-rail track between the tie piles, would make it necessary for the trams to follow directly behind the machine car, a position which is not convenient for loading by the machine con-

veyor, as a right-angled change of direction must be made by the ties in their progress from the machine to the tram. The Somerville plant of the Santa Fe has a temporary track 60 to 90 ft. long which is placed between the tie pile and the three-rail track, and upon this the machine car is placed. One rail length after another is moved forward and laid ahead of the car. This leaves the tram track clear, and trams can be brought up to the side of the machine car, allowing the conveyor to discharge the machined ties directly into them. On the feeding side the ties are thrown down from the top of the piles and placed directly on the in-feed conveyor, so that one handling is saved by the movable machine arrangement. This, however, is offset by the time lost in changing the position of the car. On an average it is probable that about one-third more ties can be put through the stationary machine in a day than through the movable plant.

The cost of installing machines for adzing and boring ties is a difficult thing to cover without definite specifications. It is more an engineering problem than a manufacturing one, as the conditions are not the same in any two cases. The cost of the machine itself may vary as much as $1,500, depending on what is wanted in the number of boring spindles, the lengths of conveyors, and whether or not the machine is to be provided with cut-off saws, branding device, dumping hoist and other special features. The cost of the power plant may also vary between wide limits—a steam engine and boiler, or a gasolene engine, costing much more than an electric motor. The building may be sufficient to protect the machine only, or may be large enough to cover both tracks and give protection to the tie feeders and loaders. One machine in the South is placed on a foundation of heavy creosoted timbers laid on top of the ground and is covered by an open shed. Another on the Pacific Coast is placed on the end of a dock of piling, 18 ft. above the ground, into which the piles are driven. It is all a question of the governing local conditions, and how much money the purchaser is willing to spend. Some plants have been installed complete for $10,000, and the cost of others has run as high as $15,000, but in the long run the most thorough work is the cheapest, the saving in operation and maintenance paying large interest on the additional cost.

Does adzing and boring pay? It is believed that the increase in life that may be expected from ties adzed and bored before treatment will not be less than one-third, but to be conservative we will consider that it is only 15 per cent., or say 21 months of added service. In the case of a railroad using 1,000,000 ties a year, costing when treated, delivered and put in track 85 cents each, the total saving in tie renewals will amount to something over $100,000 a year.

DISCUSSION.

G. E. Rex, Santa Fe, favors the use of adzing and boring machines very strongly. On one grand division of the Santa Fe untreated hard wood ties are being adzed with good results, although the greatest benefit of the process is secured on ties to be treated. The Santa Fe has operated two machines for 19 months. They can adze 3,000 ties a day at a reasonable cost.

Other members also reported favorable results from the use of adzing machines; some of whom mentioned minor mechanical changes which should be made to the machines to secure the best results.

## NATURAL AND ARTIFICIAL SEASONING OF DOUGLAS FIR FOR TREATMENT.

By F. D. Beal,

Manager, St. Helens Creosoting Co., Portland, Ore.

This subject is one on which a large amount of knowledge is yet to be obtained. Although we have been treating Douglas fir for about 24 years, we cannot say that we have yet developed a method of seasoning that is wholly successful under all conditions.

The wood, when air seasoned, is so hard and refractory that sufficient penetration by pressure treatment alone can not be obtained to insure the full protection of the wood for a sufficient length of time to make the treatment a paying proposition. Therefore, it was decided very early in the treating of Pacific Coast timber that some means of artificial seasoning would have to be resorted to in order to prepare the wood for the reception of the preservative.

The first move was to take up the steaming and vacuum process; that is, turning saturated steam directly on the timber and raising the temperature to a point to insure the thorough heating of the interior wood and the vaporizing of all sap, moisture, etc. The writer used to think they were vaporizing the wood itself, judging by the pitch, resin, etc., that came out through the drains. This was carried on until the maximum vaporizing point was reached. A vacuum pump was then started, heat being maintained in the cylinder by the circulation of superheated steam through the steam heater pipes in the bottoms of the cylinders. This process was carried on until the balance of the moisture was fully extracted from the cylinder. In this manner the wood would take the preservative under pressure very readily, but the strength was so impaired as to practically condemn it for use in structures.

Various other schemes were tried out with very little success until in 1894 John D. Isaacs conceived the idea of using a modification of the "Boulton method" of seasoning by immersing the unseasoned timber in creosote oil, using the oil as a medium for conveying the heat to the timber. The temperature of the oil is raised above the boiling point of water, thus vaporizing the moisture in the wood and allowing it to pass off through vent pipes into condensers through which cold water is circulated. This eliminates the use of a vacuum pump. In this manner, the timber was dried or seasoned with a lower degree of heat and left in good condition for the reception of the preservative under pressure. This method of seasoning has been carried on continuously on the Pacific Coast for over 20 years, and although there is some decrease in strength, the material is in much better shape and lasts longer than that air seasoned or steamed.

At present experiments are being carried on at St. Helens, Ore., at the St. Helens Creosoting Co.'s plant, under the direction of George E. Rex, of the Santa Fe, on the seasoning of 10,000 Douglas fir ties. The ties were selected and 5,000 of them which were weighed were tagged and numbered so as to keep a record of them. They were then placed in water during the months of May and June, 1912. They were cribbed in piles of about 60 ties, all being laid in one direction and separated by 1 in. strips nailed to the ties, their length being parallel to the current of the running fresh water, allowing the water to pass through the entire length of the ties.

These ties were left in the water until about September 15, when they were taken out and re-weighed to ascertain the amount of water absorbed. They were then placed in open piles to air season. When it is found that the ties are sufficiently dry they will be treated by the pressure process, without any artificial seasoning.

The object of these experiments is to find some process of seasoning without the application of heat which will allow the Douglas fir to retain its natural strength as much as possible and will not cause the excessive checking and splitting which occurs when lumber of this species of wood is seasoned in the open air, and will leave the wood in condition to receive preservative treatment. The idea of putting the ties in the water was to allow them to water season so as to wash out all of the saps and natural wood moisture. By piling them in open piles the moisture that was absorbed during the immersion is allowed to evaporate and it is hoped the wood will not check or split. At this writing, November 20, 1912, the theory is working out admirably. The ties as yet show no evidence of splitting or checking in any manner.

One pile of the ties was selected to be weighed every 15 days

to determine the rate of seasoning. The weights per tie and per cu. ft. are shown in the following table.

| | Weight Before Placed in Water. | Weight on Taking from Water Sept. 21, 1912. | Weight Oct. 5, 1912. | Weight Oct. 21, 1912. | Weight Nov. 5, 1912. | Weight Nov. 21, 1912. |
|---|---|---|---|---|---|---|
| Total weight..... | 8,328.5 | 9,389.0 | 8,169.0 | 8,045.0 | 8,038.0 | 8,155 |
| Weight per tie... | 120.7 | 136.07 | 118.39 | 116.59 | 118.2 | 118.18 |
| Weight per cu. ft. | 38.79 | 43.73 | 38.05 | 37.47 | 37.99 | 37.98 |

It was at first intended that the ties should be treated in the creosoting cylinder about November 1, but on account of the excessively heavy and continuous rain for the past month the seasoning has been retarded and it has now been decided to postpone the treatment until about February 1, 1913.

## EFFICIENT HANDLING OF TIES AND MATERIALS AT TREATING PLANTS.

By A. M. SMITH,

Superintendent, Ayer & Lord Tie Co., Argenta, Ark.

We have been unable to find any method for handling ties better than hand labor. There are times when we can use machines to materially reduce the cost of handling. While we are using the machines the laborers having nothing to do, leave, and when we cannot use the machines we have no laborers and the loss through delay is greater than the amount previously saved. For handling lumber and piling we use traveling cranes, as more than 95 per cent. of this material comes to us and is loaded out in open cars. The machines we use have a lifting capacity of about one ton at a radius of 35 ft., and can be used for light switching service when necessary. Experience has taught us that switching with these machines should be avoided as much as possible. We use on the end of the hoisting or lifting line two pairs of hooks of suitable size for handling timbers and piling, one pair for piling with a spread of about 16 in. at the points and one pair for timbers and boards that will open to 30 in. at the points. For very small lumber we use two slings, made of round chains, and handle it in weights of about one-half to one ton.

We handle piling one piece at a time for lengths up to 60 ft. at the rate of 200 to 400 piles per day with a crew of five men to each machine. In handling lumber with the same machine and crew, the cost is from 10 to 25 cents per thousand feet. We use six of these machines at our Southern plants, and frequently work part of them both day and night. For night work, a head-light is placed on the machine so that the light is always under the boom.

## PREPARING TIMBER FOR TREATMENT IN THE GULF STATES.

By R. L. ALLARDYCE,

Superintendent, International Creosoting & Construction Co., Texarkana, Tex.

In air seasoning ties I would require 90 days as a minimum and would prefer four months. The ties should be in open stack and I have found that better results can be obtained by stacking six or seven on two instead of on one as the German method calls for. The stacks should be at least three or four feet apart to allow the air to circulate freely and to give the bottoms of the alleys a little sunlight, otherwise the bottoms of the stacks become damp and moldy. In stacking on both sides of the tracks care should be taken that the stacks are directly opposite each other, making, if possible, a continuous alleyway across the yard, as this insures a better circulation of air. Ties that are loaded for treatment on damp days or in the early morning should have an initial vacuum of a half to one hour before treatment, as we have a very heavy dew to contend with at times. During this period of vacuum the closed steam coils should be used lightly to heat the ties to an even temperature, thus eliminating the dropping down of the warm oil on cold ties.

In steam seasoning there is less capital tied up, as the material is treated as it is received in the yard, and the cost is lowered by eliminating one handling. The interest on the purchase price of the material that is tied up for three or four months in air seasoning should also be considered a saving in the steaming method.

It is practically impossible to properly air season heavy materials. Caps or stringers of long leaf left in stack for five or six months, unless protected with S irons, will open up and the inspector will reject them on account of season checks. The cullage on this class of material is quite an item to commercial plants when the non-steaming method is used, for when the material is received at the plant it is up to specifications; six months later it is cull on account of season checks.

By steaming material that must be treated green all of the material is seasoned the same, and it gets a more even penetration; in the non-steaming method some of the material will season out faster than others, and in treating will absorb more of the preservative than required, while the slow seasoning pieces will not have the required amount in them. I have obtained good results from steaming, and do not know of any disadvantages.

The safe high temperature depends on the class of material that you are treating as well as its cross section. For this reason it would be almost impossible to give a factor of safety unless you could see the material to be treated. In this the operator should be governed by the sap drainage from his retort, as the flowing of the sap is a very important point in governing the steaming of the material regarding the temperature to be used as well as the duration of the steaming period. At times the sap will almost stop flowing, and it will be necessary to raise the temperature slightly to facilitate this flow.

### OTHER PAPERS.

S. J. Record of the Yale School of Forestry presented a paper on sap in relation to the properties of wood, in which he said that the prevailing theory that sap in growing timber is down in winter and up in summer is erroneous. There is more sap in growing wood in winter than in summer, but this presence of sap is not important in the securing of sound timber. Decay depends principally upon the presence of fungi, and the reasons that summer cut woods decay more rapidly are that wood seasons more rapidly, causing checking and warping. The fungi are more active in warm weather and the sap is more conductive to fungi growth.

C. P. Winslow, Forest Products Laboratory, read a paper on the transmission of air pressure in cross ties. The tests described were made at the Forest Products Laboratory on red oak, soft maple, eastern hemlock and douglas fir ties. Pressure of 84 lbs. in the cylinder was applied in one series of tests and vacuums of 26 in. in another. The pressure in the interior of the ties was measured by inserting small pipes ending in a small air chamber in the center of the tie. The results obtained indicate that red oak transmits air most readily and douglas fir is least permeable. Little difference was found between eastern hemlock and soft maple, the indication being that the former is the more permeable. Tests showed five to ten minutes as sufficient to hold maximum pressure or vacuum in the cylinder to insure maximum condition in the ties. After successive applications of pressure, the permeability seemed to be increased. After successive vacuums the opposite effect was noted.

Papers of interest to our readers, but which lack of space prevents printing in this issue, will be abstracted in the February Maintenance Section. Among them are the following: "Timber for Creosoted Block Paving," by Harry G. Davis, manager paving department, Chicago Creosoting Company; "Treatment of Douglas Fir with Creosote Oil," by G. A. Coleman, Coleman Creosoting Company; "Notes on Analysis and Testing of Coal Tar Creosote," by L. B. Shipley, Barrett Manufacturing Company.

Other papers were presented on "The Care and Treatment of Floors," by George W. Saums; "Laying Wood Block Pave-

ment," by H. S. Loud, chief engineer, United States Wood Preserving Company, New York; "The Preliminary Treatment of Timber to Insure a More Even and Satisfactory Impregnation with Creosote," by David Allerton, the Kettle River Company, Madison, Ill., and "How Nearly Does the Modern Yellow Pine Block Pavement Approach to the Ideal Pavement; What Improvements Can We Suggest," by H. L. Collier; and "Mutual Interest of Railroad and Commercial Companies in the Work of the Association," by L. B. Moses, Kettle River Company.

The annual banquet was held at Vogelsang's restaurant on Wednesday evening.

## ONE-PIECE COMBINED RAIL BRACE AND TIE PLATE.

The one-piece combined rail brace and tie plate shown in the photographs is made of a ⅜-in. flat steel plate bent and forged to shape. The plate is shown punched for screw spikes, although it can be punched equally well for the ordinary drive spikes. The lower part of the upper portion is bent at such an angle that when the screws are driven tight it is in contact with the

**One Piece Combined Rail Brace and Tie Plate.**

upper side of the flange of the rail, while the upper portion of the brace supports the head and web as with the ordinary pattern. Two hundred of these braces have been in use since last August on wyes connecting the Chicago Junction Railway with the Chicago & Western Indiana at Butler street, and with the Chicago, Rock Island & Pacific and Lake Shore & Michigan Southern at Wentworth avenue, and on a sharp curve near Western avenue, where they have given satisfactory service and have greatly decreased the amount of attention previously required. This device has been patented by Robert D. Townsend, 5821 Michigan avenue, Chicago.

**Combined Rail Brace and Tie Plate on Chicago Junction—C. R. I. & P. Wye, Chicago.**

# General News.

The government has sued the New York Central & Hudson River in the Federal court in Buffalo, N. Y., for alleged violation of the twenty-eight hour law, relative to feeding and watering live stock in transit.

The Cincinnati, Bluffton & Chicago has sued the Erie Railroad for $35,000 damages on account of the tearing up of the tracks of the C. B. & C., near Huntington, Ind., on January 12, for which certain officers of the Erie were arrested.

The Illinois Central has announced that 26 new experimental farms will be established along the lines of the system, including 15 at various points on the Central of Georgia. These will make a total of 27 experimental farms on the Illinois Central and 30 on the Central of Georgia.

The result of the strike vote now being taken by the brotherhood of firemen of the eastern roads is not to be made known until February 10. In the meantime, representatives of the conductors' and the brakemen's brotherhoods are now asking some of the principal roads for increases in pay.

A joint "Safety First" meeting will be held in Decatur, Ill., on the evening of January 25, by employees of the Wabash, the Cincinnati, Hamilton & Dayton, the Vandalia and the Illinois Central. C. W. Egan, general claim agent of the Baltimore & Ohio, will deliver an address, illustrated by stereopticon views.

Oklahoma manufacturing institutions have recorded themselves in favor of a workmen's compensation law. The measure probably will follow the Washington law, virtually giving state insurance, based upon the number of dependents rather than upon the earning capacity of the insured.—*Manufacturers' News.*

The state of Texas has begun suit in court against the Gulf, Colorado & Santa Fe, and the Galveston, Harrisburg & San Antonio, to collect penalties aggregating $700,000 for running trains behind time, in violation of the law of that state under which a penalty is imposed if a passenger train is more than thirty minutes late.

The first-aid-to-the-injured car of the American Red Cross Society is going over the Lehigh Valley, stopping at all division and terminal points, and employees are invited to attend lectures and demonstrations by first-aid experts. Two physicians who were pioneers in this form of relief are in charge of the car. Men on other railroads and in nearby manufactories are invited.

The anthracite coal railroads have petitioned the Supreme Court of the United States for a modification of the decree recently issued in which the roads are forbidden to make contracts, with coal operators, to buy their coal at a percentage of the selling price. The roads desire to continue the 65 per cent. contracts with those coal companies to which lands have been leased by the railroad companies.

Representatives of several commercial organizations of Omaha, Neb., held a conference with Vice-president C. G. Burnham, of the Chicago, Burlington & Quincy last week, to protest against the removal of the auditing force from Omaha to new office building in Chicago. It was announced that the company would adhere to its decision to concentrate the statistical force in Chicago in the interest of efficient management.

The principal railroads in Louisiana have filed a suit in court to enjoin the state railroad commission from enforcing its order requiring linen covers to be put on the seats in all passenger cars. The roads say that to provide these covers would cost several thousand dollars in the first place, and would involve a constant large expense for washing and care. The plush seats used are not unsanitary or uncomfortable, and there is no necessity for the linen covers.

Dr. C. G. Elmore has been appointed sanitary inspector of the Chicago & North Western. He is to inspect and inquire into the sanitary condition of passenger cars and stations, and for the present his efforts will be concentrated at Chicago, where he will inspect all cars arriving at or departing from the passenger terminal. He will make detailed reports and will hold

frequent conferences with the foremen of the various coach yards to suggest improved methods.

A dock on which is a coal trestle, at the foot of Erie street, Buffalo, occupied by the Delaware, Lackawanna & Western, and claimed by the government of the United States, was taken possession of by a company of soldiers last Saturday, the Secretary of War having been advised by the attorney-general that the government was the owner of the property and that the railroad company was a trespasser. The land is valued at $1,000,000, and has been a subject of litigation for many years.

An Atchison, Topeka & Santa Fe train leaving Chicago on December 30, 1912, received 887 sacks of mail from Sears, Roebuck & Company, mail order merchants, going to postoffices in the state of Kansas. An extra full baggage car was required to carry this merchandise. While the government receives its full postage revenue from such excess mail, the mail carrying railway does not receive any compensation unless that amount of mail was included in the average ascertained at the last quadrennial weighing.

A wholesale flour dealer of New York City is said to have secured 50 carloads—10,000 barrels—of flour from the Central of New Jersey without having given up the bill of lading, which, according to the way bill, the railroad agent should have demanded. Having put the flour in storage, the merchant at once borrowed on it $28,000; and now he cannot be found. It is said that the railroad clerk who surrendered the flour without securing the bill of lading had also been serving in the capacity of bookkeeper for the flour merchant.

The Delaware & Hudson has increased the pay of shopmen, blacksmiths, machinists, boilermakers and helpers. The increase affects the pay of many hundred employees. The three principal railroads centering in Boston have increased the pay of freight handlers in that city, said to be about 4,000 men altogether. Men heretofore receiving $2.14 a day will now receive $2.30; this for ten hours. The rate for overtime will be increased from 30 cents to 34½ cents an hour. Certain improvements have been made in the working conditions also.

The federal court at New York City has appointed a new grand jury to go over the cases against President Mellen, of the New Haven road, and Chamberlin, of the Grand Trunk, for alleged violation of the anti-trust law, and it is probable that these men, together with Chairman Smithers, of the Grand Trunk, will be again indicted. The indictments reported a few weeks ago were made by a grand jury, one member of which lived in New Jersey, outside the district in which the action was taken, and Mr. Mellen's lawyers have presented the claim that this fact invalidated the indictment against Mellen.

A committee representing locomotive enginemen employed on the Chicago & Alton, has filed a claim for back pay at the rate of 25 cents an hour, in addition to the scale they have received, because of the discovery that they have been for several months running locomotives weighing in excess of 215,000 lbs., the weight on which their pay has been based. Since the contract with the engineers was signed in December, 1911, the Alton has bought a number of heavy mikado freight engines. Recently the weight of the engines was stenciled as 215,000 lbs. The enginemen now demand 25 cents an hour back pay for every trip on which they have run an engine weighing 215,000 lbs. or over, and the company is asked to weigh all of the engines and check up the trips.

George Bradshaw, general safety agent of the New York Central Lines, reports that during the six months ending November, 1912, the number of employees killed, in all branches of the service, on all parts of the New York Central Lines, 58, was 14 less than in the corresponding period of 1911, a decrease of 19.4 per cent. This decrease occurred notwithstanding a large increase in the volume of business done by the roads and a consequent increase in the number of persons employed. Mr. Bradshaw has prepared a table showing the percentages of persons injured in the principal shops of the companies for three months ending with November as compared with the three months immediately preceding; and at practically all of the shops there is a large decrease.

The Northern Pacific has announced the establishment of a department to be known as the Bureau of Efficiency, for the purpose of promoting safety and welfare of employees and of patrons of the company, and to supervise the work of making more effective all efforts for safeguarding persons and property. Charles T. Banks, special representative of the third vice-president, will be in charge of the bureau, with headquarters at St. Paul. The superintendent of each division will act as the local representative to whom employees are asked to offer suggestions and report dangerous conditions or practices. Employees are requested to confer freely with the superintendent on all subjects relating to the prevention of injuries or accidents, and to make suggestions for the improvement of the service for working conditions as they now exist.

If the people of New England want the New England railroad lines to give up their steamship lines to New York City, I am perfectly willing to do so and will accept the best possible bid I can get for the steamship lines. The people and shippers of New England may awaken to find that their shipping facilities and terminals thereby have been diminished and not increased, for with the sale of our steamship lines go half of our terminals in New York City, which half can be reached only by steamers. . . . The New England lines have spent about $20,000 in advertising from Maine to Omaha, and Minneapolis to New Orleans, "Sail from Boston, but first see New England," and I think it is good advertising for the benefit of New England and its railroad lines and for the benefit of all the people in New England.—*C. S. Mellen.*

The strike of the 200 enginemen and firemen of the Bangor & Aroostook, in northeastern Maine, which began January 18, is said to have seriously crippled the freight service of the road. The company announced that it would be able to continue business in spite of the strike; and so far as passengers are concerned seems to have done so with considerable success, but shippers are complaining that freight is seriously delayed. Some of them have gone to the state legislature to try to get assistance in inducing the company and the strikers to arbitrate the complaints of the men. The strikers asked for the same rates of pay as those which were granted recently by the arbitration board in connection with the 54 principal eastern roads, but the Bangor & Aroostook, which was not represented in the committee of 54, replied that it could not afford to pay the rates approved by the arbitrators. At Boston this week it was reported that there had been an advance in the price of potatoes because of the probable shortage of that commodity, in consequence of the strike.

### Grand Trunk Extensions.

The lines of the Grand Trunk Railway system in Quebec and eastern Ontario are now connected with the Grand Trunk Pacific west of Winnipeg; and a train load of wheat was sent east on December 27. The Grand Trunk Pacific line is not yet completed for the whole distance, the present connection being made over the Temiskaming & Northern Ontario. The T. & N. O. extends from North Bay northwestward to Cochrane, 253 miles, and the Grand Trunk track has just been finished from Cochrane westward. The G. T. P. is now in operation from Winnipeg westward to Edson, which is 130 miles west of Edmonton, and 923 miles west of Winnipeg.

### Transportation Enterprise in Texas.

The record of new railroad construction in Texas was given in the *Railway Age Gazette* of December 27. Of interest also is a record of the extension of electric lines, as gathered by the Commercial Secretaries & Business Men's Association of that state. Interurban companies have built and put in operation 85 miles and graded an additional 143 miles. The new interurban projects now under course of construction aggregate 445 miles, and there are in operation in the state 267 miles. Sixty-three miles of the new construction during the year was in North Texas, while 22 miles was in the southern part of the state. The two leading lines opened during the year are the Dallas-Waxahachie and the Fort Worth-Cleburne line. Both of these lines traverse portions of the most densely populated and best agricultural sections of the state and, as in other states, the electrics lie in sections which already have the best steam railway facilities. But in the southern part of the state the interurban makes its appearance as a pioneer in transportation. A company started there intends to make a living on the shipments of fruits and vegetables which are harvested in that section the

year round. This line will connect the cities of San Benito, Santa Maria, Monte Christo, Mission and Point Isabel.

The following table shows the location and length of Texas interurban lines:

| | |
|---|---|
| Dallas to Sherman and Denison | 76 miles. |
| Dallas to Fort Worth | 35 miles. |
| Belton to Temple | 13 miles. |
| Bryan to College Station | 6 miles. |
| Galveston to Houston | 50 miles. |
| Fort Worth to Cleburne | 32 miles. |
| Dallas to Waxahachie | 31 miles. |
| San Benito to Rio Grande Valley | 14 miles. |
| Riviera to Riviera Beach | 10 miles. |
| Total | 267 miles. |

Texas lines now operating motor car service are as follows: Texas & Pacific, Terrell to Mineral Wells; Texas Midland, Terrell to Paris; Gulf, Colorado & Santa Fe, Dallas to Cleburne; Galveston to Beaumont; St. Louis & San Francisco, Brownsville to Sam Fordyce; Brownsville to Mission; Victoria to Bloomington; Victoria to Port O'Connor; Beaumont to Houston; Sherman to Dallas; Quanah, Acme & Pacific, Quanah to Paducah; Quanah to Oklahoma points.

### A Kind Word for the Railroads.

There is absolutely no reason why a woman with a tongue in her head need have the least fear or even apprehension about traveling alone. The big railroads are both mother and father to the unprotected female. In the stations are cozy couches on which the weary traveler can rest, and the mother with a fretty baby will be delighted at the sight of the little crib. It is possible almost to take a bath, with the wonderful lavatory facilities. Towels and soap, individual equipments of sanitary value, can be obtained for a nickel each. The matrons at the stations are women of refinement who watch over the women travelers with kindly solicitude. Argus like, they eye the loiterers or the young girls who regard the waiting rooms as good places in which to rouge and powder, until they are gently but firmly chased out.—*Leslie's Weekly.*

### Fundamentals of National Efficiency.

I am afraid that neither the public nor the government is awake to the real state of things. In our endeavors to control corporations we too often try to lessen their efficiency instead of increasing it. We are appalled by a railroad accident, and we suggest that every engine should have two engineers instead of one. A fast train runs off the track, and a government officer suggests that people ought not to want to travel so fast. If these views prevail the day of America's greatness is done. A people that believes in divided responsibility and waste of time has no future. For there is competition between nations, whether there be competition within the nation or not. If we are content to take things easily, Germany will be only too glad to get ahead of us.—*President A. T. Hadley.*

### A Model Statute Against Trespassing.

In response to a request from the governors or railway commissions of several states that a draft of an appropriate law against trespassing be prepared and submitted for their consideration, President Miller, of the Chicago, Burlington & Quincy, has had drawn up a proposed statute to be submitted to the state authorities. The suggested form for the proposed law is as follows:

"It shall be unlawful for any person to trespass by being upon, going upon or walking along, without right, any railroad track, right-of-way or station grounds.

"It shall be unlawful for any person, not being a passenger or employee, but a trespasser, to get on or off, or to ride upon, any railroad train, car or engine, or part thereof.

"Any person convicted of the violation of either of the preceding sections shall be punished by a fine of not less than $10 or more than $100 or by imprisonment in jail not exceeding thirty days, or both."

The requests for the draft of such a statute were elicited by a letter Mr. Miller addressed last year to the governors of the states traversed by the Burlington urging more stringent legislation against trespassing.

The Special Committee on Relations of Railway Operation to Legislation has issued a bulletin reprinting a portion of the address by C. C. McChord of the Interstate Commerce Commission delivered at Milwaukee on October 1, last, in which he called attention to the need for additional legislation against trespassing, and the article published in the *Railway Age Gazette* of December 20, on "Why 5,000 Trespassers are Killed Yearly."

### Full Crew Law Proposed in Illinois.

Some people who have nothing to do with railroading, but who spend a lot of time in meddling with other people's affairs have decided that Illinois should have the "full crew law." Indiana has one and we suppose of course Oregon has one. Oregon has everything that Kansas used to have. The term "full crew" means that a freight train shall have more men connected with it than are necessary to operate it. It is a plan of the union to legislate extra men into jobs. No fair man who has ever given the matter consideration would maintain for a moment that such legislation as the "full crew law" is necessary in Illinois.—*Manufacturers' News.*

### A Trip to the Panama Canal.*

The services of our civilians (railroad men, by the way), who initiated our work, are very cordially commended on the isthmus. After getting the work started the transfer of it to the army was no doubt a good move, because it has given stability to the whole affair; the organization and discipline are splendid. This illustrates the value of appointments for life in the army and navy, and of military standards of conduct, instead of the scattering of energy through the temporizing and terrorizing methods connected with governmental work at home in nation, state, county and city. The physical work is a much simpler problem than it was for General Dodge to build the Union Pacific Railroad in 1867-1869, or for the Pennsylvania Railroad Company to get from New Jersey to Long Island under the Hudson river, the East river and New York City, and to build its splendid terminals in New York; and less difficult than to build the subways in New York City.

In computing the value of what we got for the $40,000,000 we paid to the French, our government jots down the stock of the old and inadequate Panama Railroad at $9,000,000, which is nearly $200,000 a mile, and we are spending about $200,000 a mile more to relocate and rebuild most of it. The average capitalization of United States railroads is about $60,000 a mile. The gross earnings of the Panama Railroad are about $92,000 a mile per annum—as against $11,000 a mile average in the United States. The first class passenger rate is five cents a mile and its average rate per ton mile four cents—as against an average of three-fourths of one cent per ton mile in the United States, and when the railroad was threatened with congestion the company simply notified prospective patrons that they would not take any additional business.

The railroads of the United States are spending more every year for improvements, additions and new equipment to take care of expanding business than the whole expenditure in ten years on the isthmus. Two railroad companies alone have invested in terminals in New York City and vicinity in the last few years one-half as much as the entire cost of the canal. The City of New York is spending for a new water supply about half the amount of the canal cost, and you can see this immense work in a very agreeable motor trip from New York City. Please understand that I do not disparage the canal work at all. It is superb. To say anything less would be not only ungracious but unfair. It is well to have enthusiasm, but it is also well to have perspective and it is fruitless to travel if you do not compare this and that, and assemble conclusions, and so I could not forget that our railroads at home also represent the achievements of our own countrymen, who have always hanging over them the burden of sustaining their credit—a spectre unheard of in the Canal Zone.

It is expected that the first boat will be put through the canal about September, 1913, and that they will be ready for general business about a year later. I think that the effect on commerce of the United States, at least for the first few years, has been very much over-estimated by people all over the country. The tonnage per annum which government representatives estimate will go through the canal for the first few years is far less than that which goes through the Soo canal connecting Lake Superior

*From a memorandum by Frank Trumbull.

with Lake Huron; it is not even as much as that now being hauled by the Chesapeake & Ohio Railway. The canal will cost about $375,000,000 and the result of that expenditure is placed without money and without price at the disposal of our coastwise commerce—to compete with the railroads. Outside of any question of violating the integrity of our pledge to other countries (concerning which Great Britain has already filed a protest) the ordinary railroad mind is, perhaps, too dense to perceive why after giving the United States' boats a monopoly of the coastwise commerce as against outsiders, and quarantining the canal against all railroad-owned boats, we should also pay the owners of the coastwise commerce lines a rebate. By rebate I mean the remission of tolls. The practical effect of this "special privilege" is, of course, to increase the burden on other commerce, or to increase the deficit from year to year in the interest account and maintenance and operating cost of the canal—a deficit which must be made up out of the public purse by taxation. Part of the latter is paid by the railroads through the federal income tax, and, indirectly through the protective tariff, and part by the people of States like Iowa, Kansas and Montana, far away from the seacoast, who would perhaps be glad to have more railroad employees. Query: Why are railroads expected to be self-supporting and the canal not expected to be? The interest and cost of maintenance and operation of this 50-mile canal will at first amount to at least one dollar per ton of steamer contents. The Chesapeake & Ohio Railway furnishes the equivalent of a canal in the shape of a highway across the Allegheny mountains, and besides, carried the freight itself in its own vehicles an average distance of 256 miles for $1.04.

### School Children Warned.

The St. Louis & San Francisco has addressed to school principals in every important town in its territory, a statement showing that in the years 1901 to 1910, inclusive, 103,452 trespassers were killed or injured on the railways of the United States, of which 13,000 were under the age of 14 and 20,000 were between the ages of 14 and 21. The principals are requested, in the interest of the physical welfare of their pupils and for their educational value, to read these statistics to the children with such comments as the principals may see fit to make, and, if possible, to post these figures in conspicuous places. It is further suggested, in order to impress upon the children the injury done to the communities as well as the individual victims and their families and the importance and value of the exercise of care, that the children be requested to write essays upon "Safety First" and particularly upon the dangers of trespassing upon railroad property, either by walking on the track, playing in the yards, or riding moving trains.

### Report on Irvington Collision.

The Interstate Commerce Commission has issued the report of Chief Inspector H. W. Belnap on the butting collision between a passenger train and a freight which occurred on the Cincinnati, Hamilton & Dayton at Irvington, within the limits of the city of Indianapolis, Ind., November 13, about 3 a. m., resulting in the death of 11 passengers and four employees and the injury of six passengers and five employees. Westbound passenger train No. 36 ran over a misplaced switch, and into the head of an eastbound freight train standing on a side track. The principal points in this report are given in a condensed form in our editorial columns. The conclusions of the inspector are that engineman Yorke, of the freight, failed to close the switch or to make sure that it had been closed; that brakeman Gross is equally responsible, he having failed to see that the switch was closed and also erroneously stated that the switch had been closed, when asked about it. Yorke also exercised poor judgment in calling in the flagman before the switch had been closed. The conductor and both brakemen displayed a lack of alertness in not relighting the switch. In conclusion the report says:

"Measures should at once be taken to provide that switch lamps be kept burning at night, and that employees be required to obey the rules in the absence of a switch light. In addition to reporting switch lamps found not burning, any employee who uses switches at night on which the lamps are not burning should be required to light them.

"It cannot be considered safe practice to require or permit a train to be operated over a busy railroad by a crew all of whom on the head end of the train are inexperienced or new men; and in all cases where newly promoted enginemen are used an experienced fireman should be furnished.

"The tonnage rating of engines should be fixed so that an engine can haul a train over the road without being required frequently to double hills. When trains are required frequently to double hills, the attention of employees, anxious to make reasonable time and to avoid delaying other trains, is diverted from their usual duties, and ordinary precautions are overlooked. Under these circumstances there are unusual opportunities for disastrous errors to occur.

". . . Had automatic block signals, or any form of signals employing continuous track circuits, been in use the open switch would have been indicated by such signals and, had they been obeyed, the accident would have been averted."

### The Railway's Share of the Cost of Living.

Secretary Wilson shows that the proportion of the consumer's price that goes to the retailer as his compensation for delivering milk from the railway station to the residence of the consumer is more than six times as great as that received by the railway for carrying it from the dairy station to the city. When the farmer receives fifty per cent. of the consumer's price, the freight charge on butter is about five-tenths of one per cent. of the consumer's price; on eggs, six-tenths of 1 per cent.; apples, 6.8 per cent.; beans, 2.4 per cent.; potatoes, 7.4 per cent.; grain of all sorts, 3.8 per cent.; hay, 7.9 per cent.; cattle and hogs, 1.2 per cent.; live poultry, 2.2 per cent.; wool, three-tenths of one per cent. These percentages given by the Secretary are averages for the United States and, of course, do not hold good as to all shipments of the commodities mentioned, as there would necessarily be wide differences due to variations in the distances shipped and to other circumstances. They demonstrate, however, that, generally speaking, railway freight charges are relatively a small factor in the margin between the price received by the farmer and that paid by the consumer, and that the greater proportion of this margin goes to those who handle the products after they leave the hands of the carrier.—*W. W. Finley.*

### The Train Despatchers of New York Harbor.

[*From The New York Sun.*]

One of the most serious things that could happen to New York would be to have the marine departments of its railways tied up for twenty-four hours; it would start a famine. The railroad fleet of tugs, lighters, barges and car floats numbers more than 2,000 craft. They carry from one land terminal to another about nine-tenths of all the freight that comes into and goes out of New York, or 10,000 cars daily. The movements of the units of this fleet are as carefully timed and regulated as the progress of the trains that bring the merchandise into the terminals at Jersey City, Hoboken and Weehawken.

Most of New York's daily supply of food lands at the docks during the night and is distributed by breakfast time. One day last winter when a gale blew at from seventy to ninety miles an hour for a long time the boats had a severe time.

The tugboats have engines of from 1,200 to 1,500 horsepower. The boilers carry a steam pressure of more than 185 lbs. The tugs, car floats, steam lighters and other craft that bustle about on the water day and night seem to move with as little system as a hansom cab, but as a matter of fact, you could look at a marine despatcher's sheet and, if you knew how to read it, you could tell within a few hundred feet just where each tug and each barge or lighter or float was at any moment of the day or night.

The marine despatcher has not the same worries as the despatcher on a single track line ashore. He doesn't have to bother especially about sidings and meeting points. But he has plenty to worry about just the same. The manufacturing industries around the harbor are just as fussy about getting their freight on time as they would be if they were waiting for it inland. All the big railroads have their chief despatchers tucked away some distance from the docks. Though the rivers are out of sight the chief despatcher carries their courses in his mind's eye, and issues his orders over the telephone to his assistants along the docks. He can get into communication instantly with the road's general offices, with all its freight stations in the city and with a score or so of

his assistant tug despatchers at the river ends of the railroad freight piers. The despatchers in this department, like all other train despatchers, work in three tricks of eight hours each. Night and day, year in and year out, their offices are always open and always busy.

The chief despatcher gets word from some point a hundred miles inland, for instance, that ten carloads of apples, say, are coming in a certain freight train. These apples must be at a certain pier on the North River by 1 a. m. The shipper and the consignee have impressed on the general freight agent that they expect those apples to bring a fancy price because the market is bare. . . . Finally the train is reported within a few miles of the New Jersey terminal. The chief despatcher calls up one of his assistants along the waterfront. He knows that an especially swift and powerful tug is due to pass close to there in a few minutes and will ask for orders.

The assistant runs up the signal lights. The night is rainy and a heavy fog is creeping over the river. A man with a megaphone stands on the pier end. Suddenly he hears a hoarse shout from somewhere out in the murk. It is the tug asking for orders. A moment more and he sees the shadowy bulk a hundred feet away, steaming slowly. He megaphones his order to the captain to go to such and such a pier. . . . Only when the tugs change crews—the boats themselves are in service night and day—do they tie up at the piers. They get all their orders on the run, through flags and signal boards by day, through varicolored lanterns by night and through the megaphone when the visible signals will not give complete enough instructions. . . . In less than five minutes from the time the train halted in the yard the ten cars of apples are aboard the car float. In twenty minutes more they are across the North River alongside the pier. . . . When the weather is fine and the winds are still the despatchers can smoke their pipes tranquilly, but when fog or snow blots out the shore lights and those on the water the telephone and the telegraph chatter incessantly and feverishly. The men are tired out when their eight-hour trick is done.

The most trying time that New York's railroad fleet ever knew was one day and night last winter, when it had to battle with a hurricane. Never before had such a storm been known or had navigation been so difficult. For a time the wind blew at the rate of ninety miles an hour. There was no rest for the men in the boats or the men ashore while that storm lasted. Moving the heavy floats across the water was slow and perilous work. The cakes of ice that were hurled against the river craft were a foot thick, but the gale tossed them about like shavings. It was bitter cold, and the boats and men were sheathed in ice. Every tug that the railroads had was pressed into service and toiled under a full head of steam. New York's day's rations were landed at her water gates at the usual hours between midnight and morning. The general public was not aware that anything unusual had been done, but the railroad men, from the general managers in their offices down to the stokers with aching backs and tired eyes, agreed that that bit of work was the greatest triumph of marine railroading. New York lives from hand to mouth as regards both fuel and food.

### Firemen's Wages.

Railroad officers are generally willing to concede that the firemen's work has been largely increased in recent years; but in many instances the railroads have already voluntarily increased the pay since the introduction of Mikado locomotives. In some cases firemen are relieved at 75 miles, while at the same time drawing pay for 100 miles. On another road firemen's wages on Mikado locomotives have been advanced to $3.25 per day, where formerly they were $2.95 on all engines. The chief of the firemen's brotherhood, however, objects to any arrangement whereby a fireman is relieved at 75 miles in the middle of a division of perhaps 150 miles in length on the reasoning that it deprives a man of an opportunity for making overtime. He, therefore, demands two firemen to lighten the work, for which he expects the railroads to pay them two full days' wages. The railroads cannot see any reason in this.

"The whole question," said one general manager, "is simply one of unionism versus right or equity. Carter wants two firemen on all heavy engines because it will increase the membership of his organization. The trainmen's organizations have been instrumental in enacting the full crew bill because it adds another member to their organization for each train. Neither of these organizations will allow the extra man on the train to serve as a general utility man. The railroads would be willing to accept the full crew bill requirements if the extra man could be utilized to help the fireman, or if the extra firemen at times could help the train crew. But the men's duties have to be defined in order that there may be no uncertainty as to which union they are eligible to join.

"The railroads would be willing to put a day laborer on all locomotives to relieve the firemen. It takes no particular intelligence to shovel coal. Again the unions will not permit this. The extra man on the engine must be a firemen and draw a fireman's wages. We general managers are sometimes at a loss to know where our authority begins. We are beginning to realize where it ends."—*Wall Street Journal.*

### American Institute of Consulting Engineers.

The annual meeting of the American Institute of Consulting Engineers was held on January 14, in New York. Prof. George F. Swain, of Harvard University, addressed the meeting on the subject of Education. The address was followed by a discussion in which Rudolph Hering, General C. A. Bingham, Prof. Gardner F. Williams of Ann Arbor, Mich., and Frank J. Sprague took prominent parts.

### National Railway Appliances Association.

All railway officers who would be interested in the exhibits will this year receive a special invitation in the form of the association's year book, published this year for the first time, 8,000 copies of which will be distributed among all classes of railway officers, and not 3,000 copies, as mentioned in last week's issue.

### Railway Supply Manufacturers' Association.

The assignment of space for the exhibits which will be held in connection with the Master Mechanics' and Master Car Builders' conventions at Atlantic City next June, will take place on February 14 and not on February 11, as mentioned in last week's issue.

## MEETINGS AND CONVENTIONS.

*The following list gives names of secretaries, dates of next or regular meetings, and places of meeting.*

Air Brake Association.—F. M. Nellis, 53 State St., Boston, Mass. Convention, May 6-9, St. Louis, Mo.

American Association of Demurrage Officers.—A. G. Thomason, Boston, Mass.

American Association of General Passenger and Ticket Agents.—W. C. Hope, New York.

American Association of Freight Agents.—R. O. Wells, East St. Louis, Ill. Annual meeting, June 17-20, Buffalo, N. Y.

American Association of Railroad Superintendents.—E. H. Harman, St. Louis, Mo.; 3d Friday of March and September.

American Electric Railway Association.—H. C. Donecker, 29 W. 39th St., New York.

American Electric Railway Manufacturerers' Assoc.—George Keegan, 165 Broadway, New York. Meetings with Am. Elec. Ry. Assoc.

American Railway Association.—W. F. Allen, 75 Church St., New York. Next meeting, May 21, New York.

American Railway Bridge and Building Association.—C. A. Lichty, C. & N. W., Chicago. Convention, October 21-23, 1913, Montreal.

American Railway Engineering Association.—E. H. Fritch, 900 S. Michigan Ave., Chicago. Convention, March 18-20, 1913, Chicago.

American Railway Master Mechanics' Association.—J. W. Taylor, Old Colony building, Chicago. Convention, June 11-13, Atlantic City, N. J.

American Railway Tool Foremen's Association.—A. R. Davis, Central of Georgia, Macon, Ga.

American Society for Testing Materials.—Prof. E. Marburg, University of Pennsylvania, Philadelphia, Pa.; annual, June, 1913.

American Society of Civil Engineers.—C. W. Hunt, 220 W. 57th St., New York; 1st and 3d Wed., except June and August, New York.

American Society of Engineering Contractors.—J. R., Wemlinger, 13 Park Row, New York; 2d Tuesday of each month, New York.

American Society of Mechanical Engineers.—Calvin W. Rice, 29 W. 39th St., New York.

American Wood Preservers' Association.—F. J. Angier, B. & O., Baltimore, Md.

Association of American Railway Accounting Officers.—C. G. Phillips, 143 Dearborn St., Chicago. Annual meeting, May 28, Atlantic City, N. J.

Association of Railway Claim Agents.—J. R. McSherry, C. & E. I., Chicago. Next meeting, May, 1913, Baltimore, Md.

Association of Railway Electrical Engineers.—Jos. A. Andreucetti, C. & N. W. Ry., Chicago. Semi-annual meeting, June, 1913, Atlantic City, N. J.

Association of Railway Telegraph Superintendents.—P. W. Drew, 112 West Adams St., Chicago; annual, May 20, 1913, St. Louis, Mo.

Association of Transportation and Car Accounting Officers.—G. P. Conard, 75 Church St., New York.

BRIDGE AND BUILDING SUPPLY MEN'S ASSOCIATION.—H. A. Neally, Joseph Dixon Crucible Co., Jersey City, N. J. Meeting with American Railway Bridge and Building Association.
CANADIAN RAILWAY CLUB.—James Powell, Grand Trunk Ry., Montreal, Que.; 2d Tuesday in month, except June, July and Aug., Montreal.
CANADIAN SOCIETY OF CIVIL ENGINEERS.—Clement H. McLeod, 413 Dorchester St., Montreal, Que.; Thursday, Montreal.
CAR FOREMEN'S ASSOCIATION OF CHICAGO.—Aaron Kline, 841 North 50th Court, Chicago; 2d Monday in month, Chicago.
CENTRAL RAILWAY CLUB.—H. D. Vought, 95 Liberty St., New York; 2d Thurs. in Jan. and 2d Fri. in March, May, Sept., Nov., Buffalo, N. Y.
CIVIL ENGINEERS' SOCIETY OF ST. PAUL.—L. S. Pomeroy, Old State Capitol building, St. Paul, Minn.; 2d Monday, except June, July, August and September, St. Paul.
ENGINEERS' SOCIETY OF PENNSYLVANIA.—E. R. Dasher, Box 704, Harrisburg, Pa.; 1st Monday after 2d Saturday, Harrisburg, Pa.
ENGINEERS' SOCIETY OF WESTERN PENNSYLVANIA.—E. K. Hiles, 803 Fulton building, Pittsburgh; 1st and 3d Tuesday, Pittsburgh, Pa.
FREIGHT CLAIM ASSOCIATION.—Warren P. Taylor, Richmond, Va. Next convention, June 18, Bluff Point, N. Y.
GENERAL SUPERINTENDENTS' ASSOCIATION OF CHICAGO.—E. S. Koller, 226 W. Adams St., Chicago; Wed. preceding 3d Thurs., Chicago.
INTERNATIONAL RAILWAY CONGRESS.—Executive Committee, 11, rue de Louvain, Brussells, Belgium. Convention, 1915, Berlin.
INTERNATIONAL RAILWAY FUEL ASSOCIATION.—C. G. Hall, 922 McCormick building, Chicago. Annual meeting, May, 1913, Chicago.
INTERNATIONAL RAILWAY GENERAL FOREMEN'S ASSOCIATION.—Wm. Hall, Chicago & North Western, Escanaba, Mich. Next convention, July 22-25, Chicago.
INTERNATIONAL RAILROAD MASTER BLACKSMITHS' ASSOCIATION.—A. L. Woodworth, Lima, Ohio. Annual meeting, August 18, Richmond, Va.
MAINTENANCE OF WAY MASTER PAINTERS' ASSOCIATION OF THE UNITED STATES AND CANADA.—W. G. Wilson, Lehigh Valley, Easton, Pa.
MASTER BOILER MAKERS' ASSOCIATION.—Harry D. Vought, 95 Liberty St., New York. Convention, May 26-29, 1913, Chicago.
MASTER CAR BUILDERS' ASSOCIATION.—J. W. Taylor, Old Colony building, Chicago. Convention, June 16-18, Atlantic City, N. J.
MASTER CAR AND LOCOMOTIVE PAINTERS' ASSOC. OF U. S. AND CANADA.—A. P. Dane, B. & M., Reading, Mass. Annual meeting, September 9-12, Ottawa, Can.
NATIONAL RAILWAY APPLIANCES' ASSOC.—Bruce V. Crandall, 537 So. Dearborn St., Chicago. Meeting with Am. Ry. Eng. Assoc.
NEW ENGLAND RAILROAD CLUB.—G. H. Frazier, 10 Oliver St., Boston, Mass.; 2d Tuesday in month, except June, July, Aug. and Sept., Boston.
NEW YORK RAILROAD CLUB.—H. D. Vought, 95 Liberty St., New York; 3d Friday in month, except June, July and August, New York.
NORTHERN RAILROAD CLUB.—C. L. Kennedy, C., M. & St. P., Duluth, Minn.; 4th Saturday, Duluth.
PEORIA ASSOCIATION OF RAILROAD OFFICERS.—M. W. Rotchford, Union Station, Peoria, Ill.; 2d Tuesday.
RAILROAD CLUB OF KANSAS CITY.—C. Manlove, 1008 Walnut St., Kansas City, Mo.; 3d Friday in month, Kansas City.
RAILWAY BUSINESS ASSOCIATION.—Frank W. Noxon, 2 Rector St., New York. Annual dinner, second week in December, 1913, New York.
RAILWAY CLUB OF PITTSBURGH.—J. B. Anderson, Penna. R. R., Pittsburgh, Pa.; 4th Friday in month, except June, July and August, Pittsburgh.
RAILWAY ELECTRICAL SUPPLY MANUFACTURERERS' ASSOC.—J. Scribner, 1021 Monadnock Block, Chicago. Meetings with Assoc. Ry. Elec. Engrs.
RAILWAY GARDENING ASSOCIATION.—J. S. Butterfield, Lee's Summit, Mo. Next meeting, August 12-15, Nashville, Tenn.
RAILWAY DEVELOPMENT ASSOCIATION.—W. Nicholson, Kansas City, Southern, Kansas City, Mo.
RAILWAY SIGNAL ASSOCIATION.—C. C. Rosenberg, Bethlehem, Pa. Meetings, March 17, Chicago; June 10-11, New York, convention, October 14, Nashville, Tenn.
RAILWAY STOREKEEPERS' ASSOCIATION.—J. P. Murphy, Box C, Collinwood, Ohio. Annual convention, May 19-21, Chicago.
RAILWAY SUPPLY MANUFACTURERS' ASSOC.—J. D. Conway, 2135 Oliver bldg., Pittsburgh, Pa. Meetings with M. M. and M. C. B. Assocs.
RAILWAY TEL. AND TEL. APPLIANCE ASSOC.—W. E. Harkness, 284 Pearl St., New York. Meetings with Assoc. of Ry. Teleg. Sups.
RICHMOND RAILROAD CLUB.—F. O. Robinson, Richmond, Va.; 2d Monday, except June, July and August.
ROADMASTERS' AND MAINTENANCE OF WAY ASSOCIATION.—L. C. Ryan, C. & N. W., Sterling, Ill. Convention, September 8-12, 1913, Chicago.
ST. LOUIS RAILWAY CLUB.—B. W. Frauenthal, Union Station, St. Louis, Mo.; 2d Friday in month, except June, July and Aug., St. Louis.
SIGNAL APPLIANCE ASSOCIATION.—F. W. Edmonds, 3868 Park Ave., New York. Meetings with annual convention Railway Signal Association.
SOCIETY OF RAILWAY FINANCIAL OFFICERS.—C. Nyquist, La Salle St. Station, Chicago.
SOUTHERN ASSOCIATION OF CAR SERVICE OFFICERS.—E. W. Sandwich, A. & W. P. Ry., Montgomery, Ala. Next meeting, April 17, Atlanta, Ga.
SOUTHERN & SOUTHWESTERN RAILWAY CLUB.—A. J. Merrill, Grant bldg., Atlanta, Ga.; 3d Thurs., Jan., March, May, July, Sept., Nov., Atlanta.
TOLEDO TRANSPORTATION CLUB.—J. G. Macomber, Woolson Spice Co., Toledo, Ohio; 1st Saturday, Toledo.
TRACK SUPPLY ASSOCIATION.—W. C. Kidd, Ramapo Iron Works, Hillburn, N. Y. Meeting with Roadmasters' and Maintenance of Way Association.
TRAFFIC CLUB OF CHICAGO.—Guy S. McCabe, La Salle Hotel, Chicago; meetings monthly, Chicago.
TRAFFIC CLUB OF NEW YORK.—C. A. Swope, 290 Broadway, New York; last Tuesday in month, except June, July and August, New York.
TRAFFIC CLUB OF PITTSBURGH.—D. L. Wells, Erie, Pittsburgh, Pa.; meetings monthly, Pittsburgh.
TRAFFIC CLUB OF ST. LOUIS.—A. F. Versen, Mercantile Library building, St. Louis, Mo. Annual meeting in November. Noonday meetings October to May.
TRAIN DESPATCHERS' ASSOCIATION OF AMERICA.—J. F. Mackie, 7042 Stewart Ave., Chicago. Annual meeting, June 17, Los Angeles, Cal.
TRANSPORTATION CLUB OF BUFFALO.—J. M. Sells, Buffalo; first Saturday after first Wednesday.
TRANSPORTATION CLUB OF DETROIT.—W. R. Hurley, L. S. & M. S., Detroit, Mich.; meetings monthly.
TRAVELING ENGINEERS' ASSOCIATION.—W. O. Thompson, N. Y. C. & H. R., East Buffalo, N. Y. Annual meeting, August, 1913, Chicago.
UTAH SOCIETY OF ENGINEERS.—R. B. Ketchum, University of Utah, Salt Lake City, Utah; 3d Friday of each month, except July and August.
WESTERN CANADA RAILWAY CLUB.—W. H. Rosevear, P. O. Box 1707, Winnipeg, Man.; 2d Monday, except June, July and August, Winnipeg.
WESTERN RAILWAY CLUB.—J. W. Taylor, Old Colony building, Chicago; 3d Tuesday of each month, except June, July and August.
WESTERN SOCIETY OF ENGINEERS.—J. H. Warder, 1735 Monadnock block, Chicago; 1st Monday in month, except July and August, Chicago.

# Traffic News.

A bill has been introduced in the Minnesota senate prohibiting railways from making lower rates per mile for mileage tickets than for regular tickets.

George J. Charlton, passenger traffic manager of the Chicago & Alton, has been re-elected chairman of the executive committee of the Western Passenger Association.

Professor P. G. Holden, director of agricultural extension of the International Harvester Company, addressed the Traffic Club of Chicago at a luncheon on Tuesday, January 21, on the subject of "Greater Efficiency in Agricultural Production."

The Lehigh Valley reports that the quantity of milk carried in the cars of that road to New York City during the year 1912 was considerably larger than in 1911, the total number of cans being 1,821,522, an increase of 60,864 cars. The volume of this traffic is steadily increasing.

The National Industrial Traffic League has established permanent headquarters at Chicago, with offices in the Tacoma building. D. B. Chindblom, who has been assistant to H. C. Barlow, traffic director of the Chicago Association of Commerce, has been appointed assistant secretary of the league, and will be in charge of the office.

At the annual meeting of the Illinois and Iowa Demurrage Bureau, held at Peoria, on January 14, a resolution was passed recommending an increase in demurrage rates in Illinois for the purpose of promoting increased car efficiency by reducing undue detention of cars by shippers. William Rotchford, of Peoria, was re-elected manager.

For seven days—from January 25 to February 1—the Texas & Pacific will run an agricultural inspection train starting at Port Allen, La., and stopping at nineteen of the largest towns on the road in Louisiana. The lectures will be managed by the Louisiana State University, the State Department of Agriculture and the United States bureau of Farm Demonstration.

The annual report of the Suez canal shows that during the year 1912 the number of vessels passing through the canal was 5,373, and the receipts 135,720,000 francs ($27,145,000), an increase over the preceding year of 404 vessels, and an increase in receipts of 1,710,000 francs. Since the beginning of the present year the rate of toll charged vessels passing through the canal has been reduced to 6¼ francs per ton.

Representatives of the Transcontinental Freight Bureau held a conference with representatives of shippers for several days last week at Chicago at the suggestion of the Interstate Commerce Commission, for the purpose of adjusting differences in connection with a new tariff advancing many of the transcontinental freight rates which had been suspended by the commission. An agreement was reached on a large majority of the disputed points.

The Chesapeake Steamship Company is building two new steamers for its line between Baltimore, Md., and West Point, Va., and when these are finished, trips will be made every day between these two places. In connection with the expected increase in traffic, the Southern Railway is making extensive improvements on its track between Richmond and West Point, replacing with heavier rails all of the old 54-lb. and 60-lb. rails now in use.

The New York State Superintendent of Public Works reports that the aggregate amount of freight carried on the canals of the state during the past year was 2,606,116 tons, which was about 500,000 tons less than in 1911. Of the tonnage during the past year, only about one-fifth was through freight. The number of boats using the canals is diminishing and seems likely to continue to diminish until the completion of the barge canal, when larger vessels can be used.

The Local Freight Agents' Association of Chicago has issued a circular addressed to shippers, calling attention to the large amount of losses to shippers and railways through damage to freight because of improper packing and marking, and the use of inadequate containers. The Chicago Association of Commerce has organized a special committee, including representatives of railways, transfer companies and shippers, to make an

investigation of the subject and ascertain the prevalence of any condition which requires preventive measures.

Representatives of the principal commercial associations of Illinois have adopted resolutions expressing an appreciation of the work of the Illinois Railroad & Warehouse Commission in bringing about harmony between the railways and shippers, and expressing the wish that if the board cannot be re-appointed by the incoming Democratic administration the new board to be appointed will emulate the example which has been set. The resolutions were signed by the Chicago Association of Commerce, Wholesale Grocers Exchange, Business Men's League of St. Louis, Bloomington Chamber of Commerce, Manufacturers' & Shippers' Association of Rockford, Peoria Commercial Club, Quincy Freight Bureau, and several large corporations, and were concurred in by the Illinois Freight Committee representing the railways.

As a result of the protest of several business men's associations on account of the increase in single trip suburban fares on the Illinois Central in Chicago to two cents a mile on January 1, the corporation counsel of Chicago has submitted an opinion that the city has the power to regulate suburban fares on steam roads within the city limits. On Saturday, January 18, representatives of the protesting organizations appeared before a meeting of the local transportation committee of the city council, which appointed two sub-committees, one consisting of three aldermen and six business men to negotiate with the Illinois Central for a restoration of the old fares, and the other a committee of aldermen to investigate suburban rates on all roads entering the city with a view to the passage of an ordinance prescribing maximum rates. John G. Drennan, district attorney, represented the Illinois Central at the meeting and contended that the city has no jurisdiction over the railroad rates, which are fixed by the state.

### Traffic Club of Chicago.

The speakers for the sixth annual dinner of the Traffic Club of Chicago, to be held in Chicago on January 28, will be as follows: James Hamilton Lewis, John H. Atwood and Wilbur D. Nesbit. George A. Blair, general traffic manager of the Chicago & Alton, will act as toastmaster.

### Traffic Club of New York.

At the regular monthly meeting of the Traffic Club of New York, which was held on January 21, instead of January 28, Franklin Matthews delivered an illustrated lecture on Panama, Its Canal and Romantic History.

### Car Location.

The accompanying table, which is taken from Car Location, bulletin No. 1-A, of the American Railway Association, gives a summary of the location of freight car equipment by groups on November 30, together with surpluses and shortages on the same date.

### Car Balance and Performance.

Arthur Hale, chairman of the committee on Relations Between Railroads of the American Railway Association, in presenting the statistical bulletin No. 136, covering car balance and performance for September, 1912, says:

The miles per car per day for September was 24.4, an increase of .1 over August, 1912. This figure for September, 1911, was 23.8.

Ton miles per car per day was 396 in September, 1912, compared with 385 in August, 1912; this is an increase of 7.61 per cent. over the figure for September, 1911, which was 368.

The proportion of home cars on line was 53 per cent. compared with 56 per cent. in August. This figure for September, 1911, was 64 per cent.

There is an increase of 28 per cent. in the percentage of loaded car mileage, compared with August, 1912. This figure for September, 1911, was 71.2 per cent.

The average earnings per car per day were $2.73, compared with $2.60 in August. There is an increase of 6.23 per cent. over the earnings for September, 1911, which were $2.57.

The table on the following page gives the car balance and performance in the month covered by the report and the diagram shows car earnings and car mileage and different car performance figures monthly from July, 1907.

## INTERSTATE COMMERCE COMMISSION.

The commission has decided that all bridge companies whose bridges are used by interstate carriers shall make owners' reports to the commission.

The commission has suspended from January 10 until May 10 an item in a supplement to the tariff of the Chicago Great Western, which advances from $3 to $5 per car the switching charge at Faribault, Minn.

The commission has further suspended from January 18 until July 18, the supplements to certain tariffs, which advance rates for the transportation of grain between points in the state of Iowa and Chicago and other points.

The commission has further suspended from January 4 until May 3 certain items in supplements to Leland's tariff, which advance rates for the transportation of sand and gravel from points in Louisiana to points in Texas.

The commission has further suspended from January 4 until May 3 certain items in tariffs, which advance rates for the transportation of tin plate and sheet metal from eastern shipping points to points in Oregon, Washington, and other destinations.

The commission has further suspended from January 11 until July 11 certain schedules in certain tariffs, which contain advances in rates for the transportation of newsprint paper from Sault Ste. Marie, Ontario, to various points in the United States.

Car Location on November 30, 1912.

| | New England. | N.Y., N.J., Del., Md., Eastern Pa. | Ohio, Ind., Mich., Western Pa. | Va., W. Va., No. & So. Carolina. | Ky., Tenn., Miss., Ala., Ga., Fla. | Iowa, Ill., Wis., Minn. | Mont., Wyo., Neb., Dakotas. | Kans., Colo., Okla., Mo., Ark. | Texas, La., New Mexico. | Oregon, Idaho, Nev., Cal., Ariz. | Canadian Lines. | Grand Total. |
|---|---|---|---|---|---|---|---|---|---|---|---|---|
| Total Cars Owned | 85,526 | 669,835 | 276,072 | 200,313 | 163,130 | 457,512 | 16,549 | 105,964 | 29,626 | 131,626 | 115,388 | 2,251,541 |
| Home Cars on Home Roads | 39,302 | 323,877 | 76,505 | 90,339 | 66,488 | 273,492 | 3,951 | 41,454 | 10,900 | 65,815 | 78,891 | 1,071,014 |
| Home Cars on Foreign Roads | 46,224 | 345,300 | 199,055 | 109,974 | 96,434 | 182,328 | 12,598 | 64,045 | 18,642 | 65,576 | 36,497 | 1,176,673 |
| Foreign Cars on Home Roads | 68,048 | 323,230 | 191,461 | 84,488 | 80,287 | 217,108 | 12,938 | 54,058 | 38,188 | 79,477 | 61,487 | 1,210,740 |
| Total Cars on Line | 107,350 | 647,107 | 267,966 | 174,827 | 146,775 | 490,600 | 16,889 | 95,512 | 49,088 | 145,262 | 140,378 | 2,281,754 |
| Excess or Deficiency | 21,824 | *22,070 | *7,594 | *25,486 | *16,147 | 34,780 | 340 | *9,987 | 19,546 | 13,871 | 24,990 | 34,067 |
| Surplus | 348 | 2,770 | 284 | 1,280 | 388 | 6,862 | 622 | 2,317 | 2,014 | 8,713 | 537 | 26,135 |
| Shortage | 2,160 | 6,644 | 9,300 | 8,778 | 8,373 | 7,279 | 412 | 4,182 | 1,978 | 4,623 | 8,807 | 62,536 |
| Shop Cars— | | | | | | | | | | | | |
| Home Cars in Home Shops | 5,339 | 26,794 | 11,304 | 9,778 | 8,333 | 23,217 | 366 | 4,932 | 1,079 | 4,376 | 1,722 | 97,240 |
| Foreign Cars in Home Shops | 1,849 | 7,785 | 5,823 | 2,196 | 2,352 | 6,242 | 564 | 1,430 | 1,360 | 2,695 | 140 | 32,436 |
| Total Cars in Shops | 7,188 | 34,579 | 17,127 | 11,974 | 10,685 | 29,459 | 930 | 6,362 | 2,439 | 7,071 | 1,862 | 129,676 |
| Per Cent. to Total Cars Owned— | | | | | | | | | | | | |
| Home Cars on Home Roads | 45.95 | 48.35 | 27.71 | 45.10 | 40.76 | 59.78 | 23.87 | 39.12 | 36.79 | 50.00 | 68.37 | 47.57 |
| Total Cars on Line | 122.25 | 96.32 | 96.84 | 87.24 | 89.25 | 107.23 | 102.05 | 87.41 | 165.70 | 110.17 | 121.66 | 100.96 |
| Home Cars in Home Shops | 6.24 | 4.00 | 4.49 | 4.91 | 5.11 | 5.11 | 2.22 | 4.67 | 3.91 | 3.40 | 3.84 | 4.53 |
| Foreign Cars in Home Shops | 1.64 | 1.16 | 2.31 | 1.10 | 1.44 | 1.38 | 3.43 | 1.35 | 4.92 | 2.10 | .31 | 1.51 |
| Total Cars in Shops | 7.88 | 5.16 | 6.80 | 6.01 | 6.55 | 6.49 | 5.65 | 6.01 | 8.83 | 3.50 | 4.15 | 6.04 |

*Denotes deficiency.

FREIGHT CAR BALANCE AND PERFORMANCE IN SEPTEMBER, 1912.

| | New England. | N. Y., N. J., Del., Md., Eastern Pa. | Ohio, Ind., Mich., Western Pa. | Va., W. Va., No. and So. Carolina. | Ky., Tenn., Miss., Ala., Ga., Fla. | Iowa, Ill., Wis., Minn. | Mont., Wyo., Neb., Dakotas. | Kan., Colo., Okla., Mo., Ark. | Texas, La., New Mex. | Ore., Idaho, Nev., Cal., Ariz. | Canadian Lines. | Grand Total. |
|---|---|---|---|---|---|---|---|---|---|---|---|---|
| Revenue freight cars owned | 85,023 | 680,207 | 215,151 | 191,067 | 173,215 | 398,148 | 17,273 | 140,997 | 26,957 | 143,397 | 121,107 | 2,192,542 |
| Average number of system cars on line | 42,847 | 337,016 | 116,503 | 93,548 | 78,488 | 259,509 | 4,655 | 64,264 | 18,977 | 67,791 | 81,048 | 1,164,646 |
| Railway-owned cars: Average foreign on line | 48,505 | 296,872 | 108,646 | 67,400 | 66,217 | 185,729 | 13,165 | 63,257 | 28,190 | 66,381 | 56,475 | 1,000,837 |
| Total Railway-owned cars on line | 99,412 | 633,888 | 225,149 | 160,948 | 144,705 | 445,238 | 17,820 | 127,521 | 47,167 | 134,172 | 137,523 | 2,173,543 |
| Excess | 6,329 | *46,319 | 9,998 | *30,119 | *28,510 | 47,090 | 547 | *13,476 | 20,210 | *9,225 | 16,416 | *27,059 |
| Per cent. of cars on line to total owned: | | | | | | | | | | | | |
| Home | 50 | 50 | 54 | 49 | 46 | 65 | 27 | 46 | 70 | 48 | 67 | 53 |
| Foreign | 57 | 43 | 51 | 35 | 38 | 47 | 76 | 40 | 105 | 46 | 47 | 45 |
| All railways | 107 | 93 | 105 | 84 | 84 | 112 | 103 | 86 | 175 | 94 | 114 | 98 |
| Private cars on line | 4,212 | 46,013 | 11,515 | 2,903 | 6,941 | 17,332 | 2,528 | 11,578 | 4,061 | 11,535 | 3,024 | 121,642 |
| Total, all cars on line | 103,624 | 679,901 | 236,664 | 163,851 | 151,646 | 462,570 | 20,348 | 139,099 | 51,228 | 145,707 | 140,547 | 2,295,185 |
| Per cent. of cars in shop | 8.31 | 5.48 | 7.86 | 6.99 | 9.65 | 7.17 | 6.84 | 8.22 | 4.99 | 6.42 | 5.70 | 6.84 |
| No. of freight engines owned | 1,347 | 12,179 | 3,040 | 3,402 | 2,758 | 6,467 | 525 | 2,743 | 744 | 3,122 | 2,060 | 38,387 |
| Average cars on line per freight engine owned | 77 | 56 | 78 | 48 | 55 | 72 | 39 | 51 | 69 | 47 | 68 | 60 |
| Total freight-car mileage | 54,716,362 | 500,273,724 | 154,789,926 | 122,677,899 | 118,726,859 | 335,666,017 | 32,274,379 | 98,170,688 | 31,531,137 | 138,754,243 | 93,205,596 | 1,680,786,830 |
| Average miles per car per day | 17.6 | 24.5 | 21.6 | 25.0 | 26.1 | 23.4 | 54.4 | 24.8 | 20.8 | 31.8 | 22.1 | 24.4 |
| Per cent. loaded mileage | 75.5 | 69.8 | 74.6 | 70.0 | 74.5 | 73.8 | 75.1 | 73.9 | 75.3 | 75.4 | 78.3 | 72.9 |
| Ton-miles of freight, including company freight | 662,114,862 | 8,722,022,002 | 2,897,703,018 | 2,075,145,012 | 1,784,509,688 | 3,742,885,937 | 454,410,549 | 1,446,508,473 | 402,372,631 | 2,094,403,372 | 1,395,230,403 | 25,677,805,947 |
| Average ton-miles, including company freight | | | | | | | | | | | | |
| Per car-mile | 12.1 | 17.4 | 19.6 | 16.9 | 15.0 | 15.2 | 14.4 | 14.7 | 13.2 | 15.4 | 15.0 | 16.2 |
| Per loaded car-mile | 16.0 | 25.0 | 26.3 | 24.2 | 20.2 | 20.4 | 19.2 | 20.0 | 17.5 | 20.4 | 19.1 | 22.3 |
| Per car per day | 213 | 428 | 423 | 422 | 393 | 355 | 785 | 366 | 275 | 488 | 331 | 396 |
| Gross freight earnings | $7,199,451 | $50,777,026 | $15,636,572 | $12,172,302 | $12,158,320 | $36,760,298 | $3,792,032 | $13,010,173 | $4,335,301 | $21,436,031 | $10,510,283 | $187,787,789 |
| Average daily earnings: Per car owned | $2.52 | $2.49 | $2.42 | $2.13 | $2.34 | $3.08 | $7.32 | $2.98 | $5.36 | $5.00 | $2.89 | $2.84 |
| Per railroad car on line | 2.35 | 2.67 | 2.31 | 2.52 | 2.80 | 2.75 | 7.09 | 3.40 | 3.06 | 5.34 | 2.55 | 2.88 |
| All cars on line | 2.26 | 2.49 | 2.20 | 2.48 | 2.67 | 2.65 | 6.21 | 3.12 | 2.82 | 4.92 | 2.49 | 2.73 |

*Denotes deficiency.

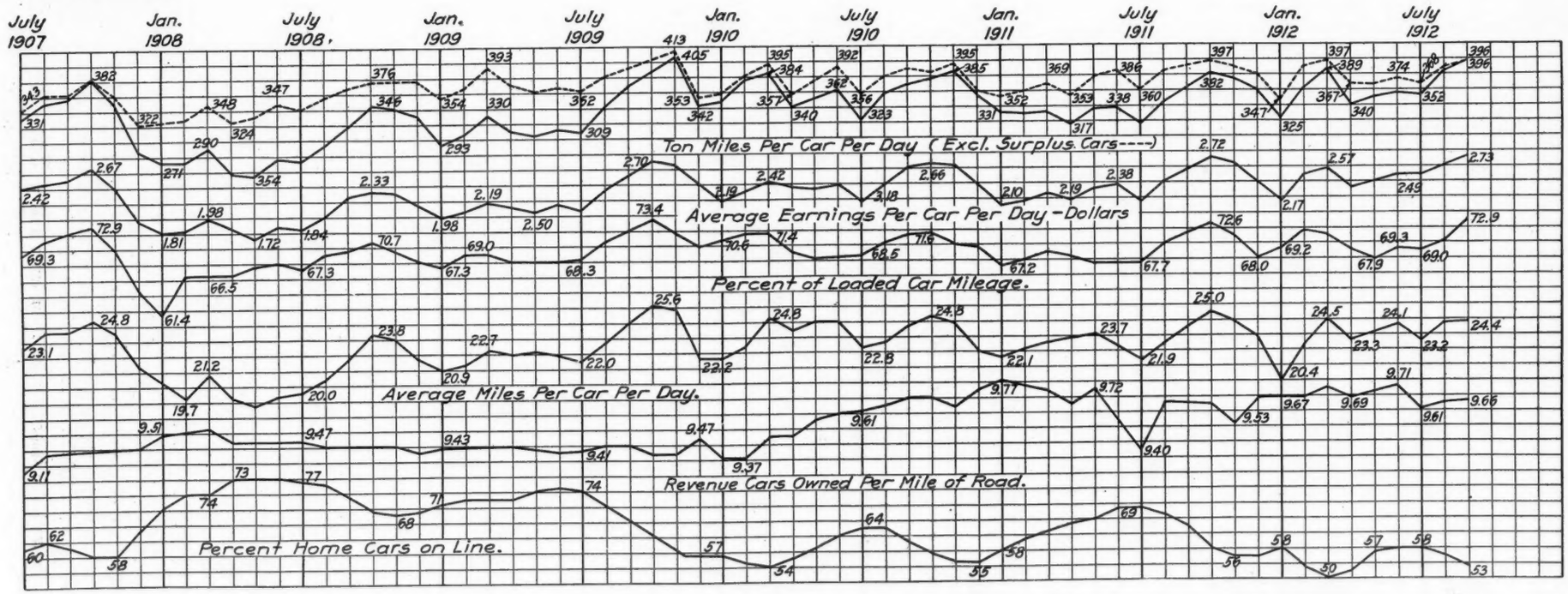


Freight Car Mileage, Earnings and Performance, 1907 to 1912.

The commission has further suspended from January 8 until July 8 certain schedules of the tariff of the St. Louis & San Francisco, which made changes in the rules governing the concentration and re-shipment of cotton and cotton linters at Memphis, Tenn.

The commission has vacated its order of suspension in the proceeding, which involved advances in rates for the transportation of cotton linters from points in Texas to points in Minnesota and Wisconsin. The carriers have now withdrawn the advanced rates.

The commission has suspended from January 15 until May 15 schedules in certain tariffs which advance from 50 cents per net ton to 60 cents per net ton rates for the transportation of cement in carloads from Nazareth, Pa., and other points to Phillipsburg, N. J., and other points.

The commission has suspended from January 10 until March 31 an item in a supplement to the tariff of the Chicago, Burlington & Quincy, which cancels joint rates with the Chicago, Zeigler & Gulf for the transportation of petroleum oil and its products from Whiting, Ind., to Zeigler, Ill.

The commission has suspended from January 8 until May 8, certain schedules in the tariff of the Missouri Pacific, which advance rates for the transportation of soft coal and soft coal briquettes from southern Illinois mines to stations on the Gould Southwestern Railway in Arkansas.

The commission has vacated as of January 28 its order of suspension in the proceeding in which the original order suspended advances in class rates from stations on the Kansas City Southern to Topeka and Lawrence, Kansas. The carriers have withdrawn the proposed advances and restored the former rates.

The commission has vacated the suspension order in the proceeding which involved advances in rates for the transportation of cottonseed from points in Oklahoma to Kansas City, Mo., and other points. The carriers have filed tariffs which withdraw the advances under suspension and restore the rates formerly in effect.

The commission has suspended from January 21 until May 21 an item in the tariff of the Southern Pacific which advances from 50 cents per ton to $1.30 per ton the rate on oranges in carloads from Folsom, Cal., to Brighton, Cal. This local rate is used in combination with the rate from Brighton to make a through rate to the interstate points.

The commission has vacated the suspension order entered in the proceeding which involved advances in rates for the transportation of mixed shipments of hay, rice straw, straw, grain and grain products between Memphis, Tenn., and points in Arkansas. The carriers have withdrawn the advances under suspension and restored the previous rates.

The commission has suspended from January 15 until March 31 items in certain tariffs which advance export rates on lumber and articles taking the same rates in carloads from Alexandria, La., to New Orleans, La., from 7 to 9 cents per 100 lbs., and it has also advanced the lumber rates from points in Arkansas, Louisiana and Texas to St. Louis, Mo., and other points in Illinois.

The commission has vacated the suspension of tariffs involved in the proceeding which related to new regulations and practices governing the handling of hay and straw at the Thirty-third Street station of the New York Central & Hudson River and at the Thirty-sixth Street station of the West Shore, in New York. The carriers have filed tariffs which restore the old regulations and practices, and the commission has therefore vacated the proceeding.

The commission has suspended from January 15 until March 25 supplement 1 to Beck's tariff, which advances the rate for the transportation of freight from western points to stations in Rhode Island on the line of the Rhode Island company. Heretofore points on that line have taken the Boston rate basis. The suspended tariff provides for application to points on this line of arbitraries above the Boston rate basis, ranging from 3 to 8 cents per 100 lbs. on several classes of freight.

The commission has suspended from January 11 until May 10 a supplement to the tariff of the Kansas City Southern. The present tariffs of the Kansas City Southern provide for refrigeration of shipments of strawberries between points on its line, including transportation from southwestern Missouri points to Topeka, Kan., of shipments of 10,000 lbs. or more. The suspended supplement withdraws the privilege as to lots of 10,000 lbs. and provides for refrigeration only on carload lots.

The commission has suspended until April 30 certain items in Countiss' tariff which provide for cancellation of an existing route on class and commodity freight including lumber and fruit from points west of Huntington, Ore., via the Oregon-Washington Railroad & Navigation Company in connection with the Atchison, Topeka & Santa Fe; Chicago, Burlington & Quincy; Chicago, Rock Island & Pacific, or the Missouri Pacific from points in Oregon via Denver or Pullman to eastern points.

The commission has suspended from January 1 until May 1, an item in a supplement to the tariff of the Delaware & Hudson, which eliminates the present milling-in-transit privileges on corn milled or mixed at Oneonta, N. Y., and destined to stations on the Boston & Maine. The effect of the item which has been suspended would be to require payment of local rates into and out of Oneonta on corn milled at that point and destined to Boston & Maine stations instead of the existing joint through rate from point of origin to Boston & Maine stations. On the traffic involved this would result in advances ranging from 6 to 13 cents per 100 lbs.

The commission has suspended from January 21 until May 21 certain items in a supplement to the tariff of the Illinois Central which canceled joint rates for the transportation of lumber from points in Mississippi on the Gulf & Ship Island Railroad and New Orleans Great Northern Railroad to trunk line territory, leaving combination rates to apply. The existing rates from points on the Gulf & Ship Island and New Orleans Great Northern are 33 cents to New York, 31 cents to Philadelphia and 30 cents to Baltimore. The application of a combination of local rates would result in an advance of 50 cents to the points named and in similar advances to other points in trunk line territory.

The Interstate Commerce Commission is to make a general investigation of the telephone business throughout the United States. The attorney-general of the United States has recently considered the question of proceeding against the telephone companies under the anti-trust law, but has decided not to do so; and he has sent to the Interstate Commerce Commission the facts which he has gathered. The attorney-general says that there are about 20,000 independent telephone companies in the country, operating about 4,000,000 telephones; this in addition to the 4,500,000 instruments of the American Telephone & Telegraph Company. Independent companies have asked the department of justice to proceed against the American company, but the attorney-general seems to have found no cause for taking such action.

---

### Reparation Awarded.

*Lafayette Taylor v. Norfolk & Western. Opinion by Commissioner Harlan:*

The former rate of $1.20 a ton for the transportation of coal from the Thacker and Kenova coal fields of West Virginia to Rarden, Ohio, was found to have been unreasonable, and reparation was awarded on the basis of the subsequently established rate of $1. The latter rate, also complained of as unreasonable, was found not to have been excessive. (25 I. C. C., 613.)

---

### Elevator Decisions.

*In the matter of Keystone Elevator Company. Opinion by Commissioner Lane:*

The commission ordered the Pennsylvania Railroad to cease and desist from leasing the elevator property located at North Philadelphia, Pa., to the Keystone Elevator & Warehouse Company so long as the stockholders of the latter are owners wholly or in part of the property passing through this elevator, and also to cease from paying any allowance for terminal services to this elevator company upon any property passing through the elevator belonging wholly or in part to any stockholder of said elevator company, unless such railroad's published tariffs

shall at the same time offer such allowance to all other shippers using said or any other elevator in the city of Philadelphia. (25 I. C. C., 618.)

### Empty Barrel Rates Increased.

*Classification of Empty Barrels. Opinion by Commissioner Lane:*

The advance objected to is change in the rating of empty tight cooperage barrels in carloads in southern classification from sixth to fifth class. The commission found that the carriers have justified the proposed advance, and the order of suspension will be vacated. (25 I. C. C., 641.)

### Grain Rates Unreasonable.

*Wichita Board of Trade v. Atchison, Topeka & Santa Fe, et al. Opinion by Commissioner Lane:*

The complainant asks that the joint rates on grain and grain products from points in Kansas on the Union Pacific to points in Texas via the Atchison, Topeka & Santa Fe and via the Chicago, Rock Island & Pacific be reduced to the basis of rates prescribed by the commission in *Farmers, Merchants & Shippers Club v. A., T. & S. F.*, 12 I. C. C., 351, to apply on grain from points in Kansas on the Atchison, Topeka & Santa Fe and the Chicago, Rock Island & Pacific to points in Texas. The commission found that the present case is not controlled by the case cited. The rates attacked, however, are found to be unreasonable in so far as they exceed rates made on the basis prescribed in the above case with an arbitrary added to allow for a two-line haul. The carriers will be given an opportunity to publish and file such rates. No order will be entered at this time. (25 I. C. C., 625.)

## STATE COMMISSIONS.

The Pennsylvania State Railroad Commission has investigated the freight rates on coal from the Clearfield region to Lancaster, and to points between Harrisburg and Lancaster, and recommends that they do not exceed $1.40 per gross ton.

The Nebraska Railway Commission, in its annual report, recommends legislation extending the commission's power to include the awarding of reparation in cases where rates are found to be excessive or discriminatory, to provide that no new tariff or freight classification may be made effective until approved by the commission, and to provide for the punishment of shippers, railway officials or employees guilty of false billing of freight.

The annual report of the Oregon railroad commission recommends legislation giving the commission power similar to that possessed by the Interstate Commerce Commission to suspend proposed advances in rates pending an investigation, and placing the burden of proof to sustain the reasonableness of such rates upon the carriers. The commission also repeats its previous recommendation for legislation giving the commission power to regulate the issuance of securities of public service corporations and asks authority to prevent the construction of grade crossings.

The New York State Public Service Commission, Second district, reports that shippers of fruit and vegetables, in the fruit district south of Lake Ontario, deal unfairly with the railroads. Delays in shipments are numerous. Market conditions in the fall of the year are uncertain and the prices are constantly changing, so that the situation fluctuates with great violence from day to day. The inability of the railroads to furnish cars results in what is usually termed "car shortage"; but a thorough investigation was made during the past shipping season, and it was found that a considerable number of shippers seem to think that they had the right to use cars as warehouses for any length of time they might see fit. The commission tells them that this is not only a wrong to the railroad, but a greater wrong to other shippers, who are thereby deprived of cars. The commission has frequently remonstrated with shippers, but the practice continues. During the month of November, the commission found 122 cases where cars were held for periods of from 5 to 25 days idle upon sidetracks, and gives a list of these in full in its report. It has also discovered 9 cases in September, 23 in October, and 30 in December.

## COURT NEWS.

In the federal court at Macon, Ga., on January 18, the grand jury reported indictments against the Seaboard Air Line for violation of the law in the transportation of coal from Briceville and Oliver Springs, Tenn., to Helena, Ga. The coal came from points on the Southern Railway, and the government charges that it was billed through on a joint rate to points beyond where it was actually unloaded; so that the Seaboard secured a considerable part of the amount paid for transportation when it should have received little or nothing.

In the federal court at Boston the grand jury has returned two indictments against the New York, New Haven & Hartford for illegal transportation of milk from points in Connecticut to Boston. The company is charged with carrying milk cheaper for certain shippers than for others. The officers of the road say that the indictments are based on a question of interpretation of the language of tariffs which have been in effect ten years; also that the practice now complained of has been open and uniform during this time. The alleged offenses took place more than two years ago.

In the federal court at Buffalo, N. Y., the Grand Trunk and its general agent, Frank P. Dwyer, have been indicted for conspiracy to violate Section 6 of the Interstate Commerce law, in connection with the transportation of theatrical companies from Detroit to Buffalo, and from Buffalo to Toronto. The indictment charges that by means of a contract which ostensibly was for advertising in the programs of theaters rates for transportation of theatrical companies were unreasonably reduced. The contract for the season of 1910-1911 called for monthly payments by the Grand Trunk of $300, a sum grossly in excess of the true value, the amount of which was reached by deducting one-quarter of a cent a mile from the regular published rate. The facts in this case are similar to indictments recently returned in Chicago against the New York Central Lines, upon which a plea of guilty was entered and a fine of $40,000 paid by the carriers.

### Commerce Court Overruled.

The Supreme Court of the United States, in a decision by Justice Lamar, in the case involving rates on freight from New Orleans to certain cities in Alabama, ordered reduced by the Interstate Commerce Commission, has sustained the Commerce Court in its opinion that the court may consider the question whether, in a given case, the commission has called for, secured or heard the evidence with due care and fulness; but holds that in this case the Commerce Court was wrong in deciding that the commission had neglected material evidence. The government attempted to establish in the commission a right to make rates without substantial evidence being presented at a hearing to show the unreasonableness of rates about to be replaced. The court decided that in making rates the commission could not rely on information gathered in investigations by itself, but must base them on evidence presented at a hearing where the railroads would have an opportunity to present their side. Justice Lamar quoted the government's contention that the Hepburn law in providing that rates should be set aside if, after a hearing, the commission should be of the opinion that the charge was unreasonable, meant that the commission's findings as to unreasonableness of rates were not subject to review by the courts; and in reply pointed to that clause in the law which required a "full hearing" to be accorded. The universal course of decisions in this country is that an administrative order by the government is void if issued without a hearing, or if the hearing was inadequate or unfair. On the government's further contention that Congress required the commission to obtain information to enable it to perform its duties, and that, therefore, when it issued an order, it was presumed to have obtained information to support its findings, Justice Lamar said:

"Such a construction would nullify the right to a hearing, for manifestly there is no hearing when the party does not know what evidence is offered or considered, or is not given an opportunity to test, or explain, or repudiate it. The information gathered may be used as the basis for instituting prosecutions for violations of the law and for many other purposes, but is not available as such in cases where the parties are entitled to a hearing."

# Railway Officers.

### Executive, Financial and Legal Officers.

H. V. Wallace has been appointed co-receiver with the Continental Trust Company, Denver, Colo., of the Denver, Laramie & Northwestern, in place of Marshall B. Smith, resigned.

C. A. Goodnow, assistant to the president of the Chicago, Milwaukee & Puget Sound, has been appointed assistant to the president of the Chicago, Milwaukee & St. Paul, with office at Chicago.

Tilghman B. Koons, whose election as vice-president and freight traffic manager of the Central of New Jersey, with headquarters at New York, has been announced in these columns, was born May 29, 1852, at Treichlers, Pa. He began railway work as a telegraph operator on the Delaware, Lackawanna & Western in 1872, and in the early part of 1873 went to the Lehigh Valley as clerk in the general freight agent's office, at Mauch Chunk, Pa., remaining with that road until 1879, when he resigned on account of ill health. In the later part of 1880 he went to the Central of New Jersey as soliciting freight agent, with headquarters at Elmira, N. Y. From 1887 to 1898 he was successively general agent, division freight agent and division freight and passenger agent, with office at Mauch Chunk, Pa. In September, 1898, he was made general freight agent at New York, and on December 23, 1902, was appointed freight traffic manager, which position he held until his recent election as vice-president and freight traffic manager of the same road. Mr. Koons has been in the continuous service of the Central of New Jersey for the past 33 years.

T. B. Koons.

George L. Peck, who, on January 1, became fifth vice-president of the Pennsylvania Lines West of Pittsburgh, with headquarters at Pittsburgh, Pa., as already noted in these columns, was born July 10, 1858, at Sandusky, Ohio, and was educated in the public schools. He began railway work in June, 1873, with the Northwestern Ohio, now a part of the Pennsylvania Lines, and from July, 1876, to February, 1881, was chief train despatcher for the Pennsylvania Lines at Toledo, Ohio. He was then until December of that year a train despatcher for the Columbus, Hocking Valley & Toledo, and was chief train despatcher on the Pennsylvania Lines at Toledo from the latter date until March, 1882, when he became trainmaster of the Toledo division. In April, 1894, he was promoted to superintendent of the Richmond division, and in January, 1896, was transferred to the superintendency of the Pittsburgh division. Mr. Peck was appointed general superintendent of the Southwest System, with headquarters at Columbus, Ohio, on January 1, 1901, and in June of that year became general manager of all Pennsylvania Lines West of Pittsburgh, which position he held until he was elected fifth vice-president in charge of the transportation department, as above mentioned.

G. L. Peck.

Percy R. Todd, vice-president of the Bangor & Aroostook, with office at Bangor, Me., has been elected president, succeeding Arthur Holland, resigned. Mr. Holland remains as chairman of the executive committee of the board.

Walter E. Hackett has been appointed treasurer of the Chicago, Kalamazoo & Saginaw, the Detroit & Charlevoix, the Detroit Terminal Railroad and the Toledo Terminal Railroad, and has also been appointed local treasurer of the Michigan Central, the Toronto, Hamilton & Buffalo and the Detroit River Tunnel Company, with headquarters at Detroit, Mich., succeeding John E. Griffiths, deceased.

### Operating Officers.

Y. M. Martin has resigned as trainmaster of the Missouri, Kansas & Texas at Waco, Tex., to engage in business at San Antonio, Tex.

W. D. Danley has been appointed superintendent of the transportation department of the Chicago, Peoria & St. Louis, with headquarters at Springfield, Ill., effective January 13.

C. E. Cate has been appointed assistant superintendent of the Sonora division of the National Railways of Mexico, with headquarters at Empalme, Sonora, Mex., succeeding C. J. Anderson, promoted.

Frank M. Lucore, assistant to the general agent of the American Railway Association, with office at Chicago, has been appointed assistant general manager of the Sunset-Central Lines of the Southern Pacific Company, in charge of distribution of equipment, with headquarters at Houston, Tex. Mr. Lucore was born April 12, 1869, and was educated in the common schools of Nebraska. He began railway service in 1888 as a clerk in the car accountant's office of the Burlington & Missouri River, and was subsequently to January, 1898, chief clerk in the same office. He was then acting car accountant until June, 1899, when he was made car accountant of that road. He was appointed assisting car accountant of the Chicago, Burlington & Quincy, with headquarters at Chicago, on July 1, 1903, where he remained until he became assistant to the general agent of the American Railway Association in the spring of 1907. This position he now leaves to go to the Sunset-Central Lines of the Southern Pacific, as above noted.

F. M. Lucore.

C. S. Ruttle, superintendent of the Detroit, Bay City & Alpena, has been appointed general superintendent, and will continue as general freight and passenger agent, with headquarters at Bay City, Mich. A. C. McDaniel, auditor and car accountant, has been appointed superintendent also, with office at Bay City.

Mott Sawyer, superintendent of the Bellingham Bay & British Columbia at Bellingham, Wash., has been appointed superintendent of the Columbia division of the Chicago, Milwaukee & St. Paul, with headquarters at Malden, Wash., the former road having been purchased by the Chicago, Milwaukee & St. Paul.

S. H. Charles, trainmaster of the Missouri, Kansas & Texas at Parsons, Kan., has been appointed superintendent of the

Oklahoma district, with headquarters at Oklahoma City, Okla., to succeed W. E. Brown, resigned. Mr. Charles is succeeded as trainmaster by C. I. Evans, road foreman of engines at Parsons. Effective January 15.

A. B. Ramsdell, superintendent of the St. Louis division of the Chicago, Rock Island & Pacific, at Eldon, Mo., has been appointed superintendent of the Kansas division, with headquarters at Herington, Kan., succeeding G. W. Rourke, who has been transferred to the Illinois division, with headquarters at Rock Island, Ill., in place of H. L. Reed, who succeeds Mr. Ramsdell.

William Boas Wood, who recently became superintendent of the Eastern division of the Northwest System of the Pennsylvania Lines West of Pittsburgh, with headquarters at Allegheny, Pa., was born September 11, 1876, at Harrisburg, Pa. He attended the Sheffield Scientific School from 1894 to 1897, and began railway work in October of the latter year in the chief engineer's office of the Pittsburgh, Cincinnati, Chicago & St. Louis. On September 1, 1899, he was made assistant engineer of the Cleveland & Pittsburgh division of the Pennsylvania Lines West of Pittsburgh, and on January 1, 1901, was appointed engineer of maintenance of way of the Cincinnati & Muskingum Valley, remaining in that position six months, when he was transferred to the Cleveland & Pittsburgh division of the Pennsylvania Lines West in a similar capacity. Mr. Wood was promoted to superintendent of the Richmond division of the Pittsburgh, Cincinnati, Chicago & St. Louis on July 1, 1903, and was made superintendent of the Cleveland, Akron & Columbus on January 1, 1906. Six years later he again returned to the Cleveland & Pittsburgh division of the Pennsylvania Lines as superintendent, which office he held when he was advanced to the position of superintendent of the Eastern division, as noted above.

John Joseph McCullough, whose appointment as division superintendent of the Northern Pacific, with headquarters at Seattle Wash., has been announced in these columns, was born June 17, 1871, at De Soto, Ill. He attended the common schools from 1878 to 1885 and began railway work in May, 1888, as freight brakeman on the Illinois Central. Four months later he went to the Minneapolis & St. Louis, at Minneapolis, Minn., in a similar capacity and was promoted to freight conductor in 1891, leaving in 1894 to go with the Great Northern in yard service at Superior, Wis., and Duluth, Minn. He was made general yardmaster of the Lake terminals in 1896, resigning in September, 1900, to become general yardmaster of the Erie at Susquehanna, Pa., and three months later was transferred to the eastern terminals as general yardmaster and trainmaster, where he remained until 1906. He was then employed by the Minneapolis, St. Paul & Sault Ste. Marie at Minneapolis as yardmaster, and in November, 1907, became connected with the Northern Pacific as general yardmaster at Billings, Mont. In June, 1908, he was made assistant trainmaster on the Rocky mountain division; three months afterwards became senior trainmaster on the Montana division at Livingston, Mont., and in April, 1910, was promoted to inspector of terminals of the entire system, with headquarters at St. Paul, Minn., which position he held at the time of his recent appointment as superintendent of the Puget Sound division, as above noted.

J. J. McCullough.

The Western Maryland announces changes in superintendents' territories as follows: C. A. Steiner, with office at Cumberland, Md., is now in charge of all territory west of George's Creek Junction, Md., and of the first and second districts south of Knobmount, W. Va.; F. L. Brendel, with office at Baltimore, Md., is in charge of all territory east of Edgemont, including the Baltimore terminal, and H. H. Berry, with office at Hagerstown, is now in charge of all territory west of Shippensburg, Pa., up to and including the switch at George's Creek Junction.

### Traffic Officers.

E. F. Tillman has been appointed general live stock agent of the Frisco Lines, with headquarters at Ft. Worth, Tex.

A. T. Stewart, assistant to Vice-President J. M. Johnson of the Missouri Pacific, has been appointed assistant to the general traffic manager, with headquarters at St. Louis, Mo.

Henry Edwards Pierpont, general freight agent of the Chicago, Milwaukee & St. Paul, has been appointed freight traffic manager of that road, with headquarters at Chicago, effective January 15. He entered the service of the Chicago, Milwaukee & St. Paul in 1883 as a telegraph operator, and occupied various positions in the station and auditing departments, including the position of freight agent at Kansas City, Mo., until 1893, when he became division freight and passenger agent at LaCrosse, Wis. He remained in that position until January 1, 1896, when he was made assistant general freight agent, with office at Chicago. He filled the latter office ten years, being advanced to general freight agent on January 1, 1906, from which position he is now promoted to that of freight traffic manager, with headquarters at Chicago.

H. E. Pierpont.

W. M. Coble has been appointed soliciting agent of the Macon, Dublin & Savannah, with office at Jacksonville, Fla., and R. E. Phillips, traveling freight agent at Atlanta, Ga., has resigned, and his former position has been abolished.

N. J. Ferguson, traveling freight and passenger agent of the Quebec, Montreal & Southern, with office at Montreal, Que., has been appointed general freight and passenger agent, with headquarters at Montreal, succeeding D. I. Roberts, resigned.

Gay W. Norman, traveling passenger agent of the Grand Trunk, with office at Kansas City, Mo., has been appointed traveling passenger agent, with office at Chicago, succeeding M. J. Corcoran, resigned, and W. M. Lewis succeeds Mr. Norman.

Thomas Grayson Smiley, who has been appointed freight traffic manager of the Western Maryland, with headquarters at Baltimore, Md., as has been announced in these columns, was born on May 26, 1864, at Baltimore. He was educated at Knapp's Institute, Baltimore, and began railway work on March 1, 1880, as a messenger in the general freight office of the Baltimore & Ohio. He has since seen service in the freight traffic department of that and other roads, including the Columbus, Hocking Valley & Toledo, now the Hocking Valley; the Cleveland, Cincinnati, Chicago & St. Louis; the Ohio Southern, now a part of the Detroit, Toledo & Ironton, and the Western Maryland. In the early part of 1907, he was promoted from freight tariff agent of the Western Maryland to assistant general freight agent, and in July of the same year was made general freight agent of the same road, which position he held at the time of his recent appointment as freight traffic manager, as above noted.

O. S. Lewis, division freight agent of the Cincinnati, Hamilton & Dayton, has been appointed division freight agent of the Baltimore & Ohio Southwestern, with office at Cincinnati, Ohio,

to succeed W. C. McLaughlin, who has been appointed freight tariff agent of that road and the Cincinnati, Hamilton & Dayton, with office at Cincinnati, in place of J. W. Allison, who succeeds Archibald Fries as assistant general freight agent of the Baltimore & Ohio Southwestern and the Cincinnati, Hamilton & Dayton at Cincinnati. Edward Hart, Jr., assistant general freight agent of both roads at St. Louis, Mo., has been appointed western general freight agent of the Baltimore & Ohio Southwestern, with headquarters at St. Louis, and the former office is abolished. P. D. Freer succeeds O. S. Lewis as division freight agent of the Cincinnati, Hamilton & Dayton, with office at Dayton, Ohio.

Frederic A. Miller, general passenger agent of the Chicago, Milwaukee & St. Paul, has been appointed passenger traffic manager, with headquarters at Chicago, effective January 15. Mr. Miller was born April 10, 1858, at Harford, Pa., and began railway work in August, 1874, with the Cairo & Vincennes, now a part of the Cleveland, Cincinnati, Chicago & St. Louis, filling the positions of cashier and ticket seller at Cairo, Ill., and freight and ticket agent and clerk in the general freight and passenger office until 1878, when he was made general passenger agent of that road. He resigned in 1882, and for one year was union ticket agent of the Wabash, St. Louis & Pacific, the St. Louis, Iron Mountain & Southern, and the Mobile & Ohio at Cairo. Mr. Miller then went to the Chicago, Milwaukee & St. Paul as clerk in the general passenger department. Two years later he was made general agent at Chicago, and from 1887 to October, 1900, he was assistant general passenger agent. He was then appointed general passenger agent, and now becomes passenger traffic manager, as noted above, having completed thirty years of service with the St. Paul road.

F. A. Miller.

### Engineering and Rolling Stock Officers.

George W. Robb, master mechanic of the Grand Trunk Pacific, has transferred his office and staff from Rivers, Man., to Transcona, Man.

A. L. Grandy, division engineer of the Pere Marquette at Saginaw, Mich., has been appointed chief engineer, with headquarters at Detroit, Mich.

Benjamin T. Payne has been appointed general bonus supervisor of the Atchison, Topeka & Santa Fe, with office at Topeka, Kan., effective February 1, succeeding John Epler.

J. O. Ely, assistant engineer of the Louisville & Nashville, at Knoxville, Tenn., has been appointed roadmaster of the Lexington and Eastern division of the Louisville & Nashville.

W. A. Hawley has been appointed division engineer of the Erie & Ashtabula division of the Northwest System of the Pennsylvania Lines West of Pittsburgh, with headquarters at New Castle, Pa., succeeding W. R. Hillary, promoted.

D. Patterson, master mechanic of the Kansas City, Mexico & Orient, with headquarters at Wichita, Kan., will hereafter handle all matters pertaining to the motive power and car departments, and the office of general superintendent of motive power and car departments heretofore held by Fred Mertsheimer is abolished.

E. F. McCrea, division engineer of the Cincinnati division of the Southwest System of the Pennsylvania Lines West of Pittsburgh, has been appointed division engineer of the Cleveland & Pittsburgh division, Northwest System, with headquarters at Cleveland, Ohio. E. G. Johnston, assistant engineer, Southwest System, at Indianapolis, Ind., has been appointed assistant division engineer of the Eastern division, Northwest System, with headquarters at Pittsburgh, Pa.

A. P. Prendergast, who has been appointed superintendent of motive power of the Baltimore & Ohio at Baltimore, Md., as has been announced in these columns, entered the service of the Baltimore & Ohio, in 1885, as an apprentice in the shops at Wheeling, W. Va. After completing his apprenticeship he pursued a technical course while employed at Pittsburgh and Youngstown, Ohio, later becoming gang foreman in the Baltimore & Ohio shops at Wheeling, W. Va., and then machine shop foreman at Cumberland, Md., where he also served as roundhouse foreman. He was later made general foreman of locomotive and car repairs and then promoted to master mechanic at Grafton, W. Va. He was subsequently transferred to the Riverside shops at Baltimore, and on January 1, 1910, became master mechanic at the Mount Clare shops, Baltimore. On November 16, 1910, he became superintendent of motive power of the Baltimore & Ohio Southwestern at Cincinnati, Ohio, and in May, 1912, his authority was extended over the Cincinnati, Hamilton & Dayton.

## OBITUARY.

I. T. Preston, general agent of the Frisco Lines at New Orleans, La., died on January 14.

Earl P. Douglas, formerly agent of the Star Union Line at Des Moines, Ia., died in that city on January 19, aged 76 years.

F. G. Hudson, general attorney for the St. Louis, Iron Mountain & Southern for the state of Louisiana, with headquarters at Monroe, La., died on January 17, at Hot Springs, Ark.

George W. Parker, general agent of the Illinois Central at St. Louis, Mo., died in that city on January 19. He had been in railway service since 1862, when he was made district attorney in Illinois for the St. Louis, Alton & Terre Haute. He was subsequently general counsel, vice-president, vice-president and treasurer, vice-president and general manager, and from 1885 to 1890, president of that road. Later he became general agent of the Illinois Central. Between 1869 and 1874 he built the St. Louis & Cairo Short Line, which was sold to the Illinois Central in 1896. In 1886 and 1887 he was president of the American Railway Association.

William Greene Raoul, for many years prominent in the railroad business in Georgia and in Mexico, died on January 19, at Atlanta, Ga. Mr. Raoul was elected vice-president of the Central of Georgia in June, 1880, and from January, 1883, until January, 1887, was president of the same company. From April, 1887, to April, 1904, he was president of the Mexican National and of the Texas Mexican, and also of the National Railroad of Mexico. Prior to 1880 he had been successively assistant roadmaster, roadmaster, superintendent, and general superintendent on railroads in Georgia. He was for a time president of the Atlantic & Birmingham.

John Thomas Wann, formerly auditor of the Erie, died at his home in Buffalo, N. Y., on January 12, at the age of 75. He was born in Ireland, and educated at the Royal Academical Institution, Belfast, and began railway work in 1871 in the accounting department of the Atlantic & Great Western, now a part of the Erie. From 1872 to 1874 he was secretary to vice-president, and then for six years was secretary to receiver of the same road. Upon reorganization of the Atlantic & Great Western in 1880, Mr. Wann remained with General Devereaux, who was the president of the Cleveland, Columbus, Cincinnati & Indianapolis, with general offices at Cleveland, Ohio, and was secretary of that company up to February, 1890, when he returned to the A. & G. W. (the New York, Pennsylvania & Ohio) as auditor. In November, 1895, he was appointed auditor of the reorganized Erie Railroad Company, and went to New York. He was the chief accounting officer of the Erie up to his resignation in the fall of 1902, from active business. He was a man of high character, of dignified, though affable manners, and of wide acquaintance with the leading railroad men of his time.

# Equipment and Supplies.

## LOCOMOTIVE BUILDING.

P. WELSH, Vancouver, B. C., is making inquiries for 1 locomotive.

MITSUI & COMPANY, New York, are making inquiries for 3 locomotives.

THE ST. LAWRENCE BRIDGE COMPANY has ordered 1 locomotive from the American Locomotive Company.

THE PENNSYLVANIA LINES WEST, have ordered 40 consolidation locomotives from the American Locomotive Company, 15 passenger locomotives from the Baldwin Locomotive Works, and 10 switching lcomotives from the Lima Locomotive Corporation. The consolidation locomotives will be equipped with superheaters, will have 26 in. x 28 in. cylinders, 62 in. driving wheels, and in working order will weigh 254,000 lbs.

## CAR BUILDING.

THE NORTHERN PACIFIC is in the market for 6 postal cars.

THE NEW YORK, CHICAGO & ST. LOUIS is in the market for four all steel passenger coaches.

THE LOUISVILLE & NASHVILLE is said to be in the market for 500 gondola cars. This item has not been confirmed.

THE DULUTH, MISSABE & NORTHERN has ordered 1,000 freight cars from the Western Steel Car & Foundry Company.

THE CHICAGO, INDIANAPOLIS & LOUISVILLE has ordered 2,000 freight cars from the Haskell & Barker Car Company.

THE DULUTH & IRON RANGE has ordered 800 steel ore cars from the Standard Steel Car Company, and 200 ore cars from the American Car & Foundry Company.

THE CAROLINA, CLINCHFIELD & OHIO, mentioned in the *Railway Age Gazette* of January 17, as being in the market for from 500 to 2,000 freight cars, is not in the market for any freight equipment at the present time.

## IRON AND STEEL.

THE CHICAGO & ALTON has ordered 1,100 tons of steel from the Wisconsin Bridge & Iron Company.

THE TEXAS & PACIFIC has ordered 1,050 tons of structural steel from the Phoenix Bridge Company.

THE ATCHISON, TOPEKA & SANTA FE has ordered 250 tons of structural steel from the American Bridge Company.

## SIGNALING.

The New York State Public Service Commission has ordered the installation of an interlocking plant at Cheektowaga, where the Lehigh Valley and the Erie are crossed by the International (electric) railway. The International is required to pay the whole expense of installation, maintenance and operation. It appears that the International is bound by a contract with the Lehigh Valley to install crossing protection upon demand of the chief engineer of the L. V. This demand was made and a plant was constructed at an expense of about $5,000, which cost was paid by the International. After the construction of this plant, and when it was about ready to be put in use, it was inspected by the electric railroad inspector of the commission, who pronounced the same dangerous to operate by reason of its proximity to the tracks of the Erie; the situation being such that a car moving south and crossing the Erie tracks might be halted by the derail so that the rear end of the car would remain upon the Erie tracks, thereby exposing it to being run into by a passing train of the Erie. The result was that the signals were not put in use. The commission is now satisfied that the interlocking should be installed so as to include in its operation the crossing of the Erie.

# Supply Trade News.

Harry Lowman, formerly with the mechanical department of the Southern Railway at Washington, D. C., has entered the sales department of the Chicago Car Heating Company.

The Epping-Carpenter Company, Pittsburgh, Pa., manufacturer of pumping machinery, has opened a branch office at 131 State street, Boston, Mass., in charge of James J. Hart, formerly with the International Steam Pump Company and the Warren Steam Pump Company.

W. W. Talbert has been appointed sales engineer of the Union Switch & Signal Company, Swissvale, Pa., in the central district, with headquarters at Chicago, succeeding W. M. Vandersluis. J. F. Talbert has been appointed superintendent of construction for the central district, succeeding W. W. Talbert.

The annual convention of the sales and factory organizations of the Chicago Pneumatic Tool Company, was held at the show rooms of the company, 1337 South Michigan avenue, Chicago, on January 9, 10 and 11, concluding with a banquet on Saturday evening, January 11, at the Chicago Automobile Club. Nearly 100 of the company's representatives were present. The meeting was opened on Thursday morning with an address by President W. O. Duntley, and the succeeding meetings were divided into sessions devoted respectively to the air compressor department, railroad department, Cleveland plant, general sales department, Detroit plant, electrical department and commercial automobile department.

George Myrick Sargent, of Evanston, Ill., the founder of the first plant in the United States for the exclusive manufacture of brake shoes, and at the time of his death a director of the American Brake Shoe & Foundry Company, died at Atlantic City, N. J., on January 16, at the age of 83. Mr. Sargent patented and developed in 1878 an improvement in brake shoe manufacture, which was finally developed into the American Brake Shoe & Foundry Company. He was born in Sedgwick, Maine, March 29, 1830, and after being engaged for several years in various lines of business in the east entered the iron industry at Moline, Ill., in 1870 as part owner of the Moline Malleable Iron Works. In 1876 he removed to Chicago and invented and designed an improved brake shoe, subsequently known as the Congdon, and organized a company for its production under the name of George M. Sargent & Co. In 1878 it was incorporated as a stock company under the name of the Congdon Brake Shoe Company, and in 1893 a new corporation was organized to carry on the business under the name of the Sargent Company, with Mr. Sargent as president. The company operated two plants, one for the exclusive manufacture of cast iron brake shoes, and another, which after 1896, was devoted almost entirely to the production of couplers, knuckles and steel brake shoes. This business was successfully carried on until 1901, when the American Brake Shoe & Foundry Company, promoted by W. D. Sargent and others, was organized and when it purchased the Chicago Heights plant. Shortly afterward the original plant of the company at Fifty-ninth street, then devoted to steel casting work, was acquired by the American Steel Foundries. Mr. Sargent was elected a director of the American Brake Shoe & Foundry Company. He was also for several years president of the Live Poultry Transportation Company, and in 1901 he was elected vice-president for Illinois of the National Association of Manufacturers. He was for many years a well known figure in railway and supply business circles,

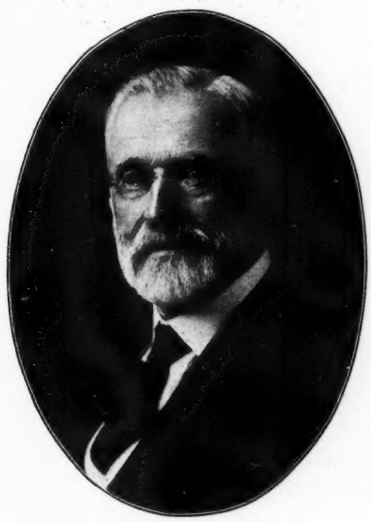

George M. Sargent.

and up to 1895 had attended 17 conventions of the Master Car Builders' and Master Mechanics' associations.

The Standard Heat & Ventilation Company, Inc., 141 Cedar street, New York, has recently been incorporated and has bought the rights of the Ward Equipment Company, New York, and the Safety Car Heating & Lighting Company, New York, relating to car heating and ventilating, and will make and sell the devices in these special lines hitherto furnished by the two latter companies. The Safety Car Heating & Lighting Company will also act as its agent. The company has now at its disposal a new plant especially equipped for the manufacture of railway car heating and ventilating appliances. The directors of the company are as follows: C. B. Adams, Wm. Barbour, R. M. Dixon, A. W. Kiddle, W. B. Albright, J. F. Deems, W. L. Garland, A. C. Moore and John E. Ward. The officers of the company are as follows: President, J. F. Deems; vice-presidents, A. W. Kiddle and A. L. Whipple; treasurer, A. C. Moore, and secretary and assistant treasurer, John J. Clapp.

The general contracting firm of James Stewart & Co., New York, has been incorporated under the same name, with $3,750,000 capital. The $3,750,000 stock is divided into $1,000,000 7 per cent. cumulative first preferred stock, $1,500,000 7 per cent. cumulative second preferred and participating stock, and $1,250,000 common stock. All of the stock has been issued except $250,000 of the common stock, which will be held in the treasury. There will be no public offering of the shares, as Alexander M. Stewart and James C. Stewart, who constituted the old firm, have together with their friends, purchased all stock available. The officers of the new company will be A. M. Stewart, president; J. C. Stewart, vice-president; Henry W. Lohmann, second vice-president and western manager; C. F. Transom, third vice-president and chief engineer; W. A. Rowan, treasurer, and J. B. A. Fosburgh, secretary. The balance sheet of the new corporation shows total net assets of $2,857,109 after payment of all obligations, of which $1,637,997 is cash and liquid items, the balance of $1,219,112 being in real estate and equipment. The company has $20,000,000 worth of business booked at present; during 1912 its net earnings were in excess of $350,000. Average net earnings for the past five years were in excess of 10 per cent. on its present capital.

## TRADE PUBLICATIONS.

Electric Fans.—The General Electric Company, Schenectady, N. Y., has published its 1913 catalog of electric fans, illustrating and describing fixed and oscillating desk and bracket fans for alternating and direct currents; also ceiling fans and ventilating fans.

Pneumatic Compressors.—The Chicago Pneumatic Tool Company has published in bulletin No. 34 F a detailed description of the design and construction of class G, Chicago pneumatic compressors. This bulletin is 28 pages long and shows many illustrations and diagrams.

Southern Railway.—The land and industrial department of this company has published a list of mines and quarries in the territory served by the lines of the Southern Railway, showing their location and the kind and amount of output. It has also published a list of live stock shippers and slaughter and packing houses, showing the location, kind of stock handled and the annual output.

Electric Products.—The Sprague Electric Works of the General Electric Company, New York, has published bulletin No. 115, on its electric products. This bulletin supersedes bulletin No. 114, and points out the advantages of Sprague electric direct current generators and switchboards, direct current and alternating current motors, exhaust fans, electric hoists, etc. The bulletin is attractively illustrated.

Railway Electrification in Italy.—In the course of an interesting article in the *Elektrische Kraftbetriebe und Bahnen*, it is pointed out that the remarkable progress in the electrification of railways in Italy is due in no small measure to generous subventions by the government. According to the importance of the lines—be they suburban, interurban or main lines—the Italian government grants subventions. Of the sum allocated one-tenth is devoted to construction and nine-tenths to operation.

# Railway Construction.

Asherton & Gulf.—According to press reports a contract has been let for building an extension of about 10 miles to Carrizo Springs, Tex. The line is now in operation from Artesian Wells northwest to Asherton, 32 miles. (October 18, p. 774.)

Athabasca & Grande Prairie.—Application has been made in Canada for a charter to build from some point at or near the junction of the Solomon river with the Athabasca river in Alberta, northwesterly to a point at or near the junction of the Smoky river with the Muskeg river in the same province, thence north to Dunvegan, passing through Grande Prairie at a point on the westerly side of Bear Lake. Pringle & Guthrie, Ottawa, Canada, are solicitors for applicants.

Baltimore & Virginia.—An officer writes that the company may let contracts soon for building a section of the line. The plans call for building from Baltimore, Md., south through Anne Arundel and Calvert counties to Drum Point, on the Patuxent river. Part of the grading has been finished ready for tracklaying, and a small amount of track has been laid. The plans include putting up a few trestles, also some terminal docks and shop buildings. The company expects to use gasolene motor cars on the line. H. M. Thompson, Baltimore, may be addressed. (August 25, p. 390.)

Brantford & Hamilton (Electric).—An officer writes that the company will carry out work with its own men on an extension from the present line at Langford, in Brantford township, Ont., north and westerly to Galt, about 17 miles. (December 27, p. 1288.)

Canadian Central & Labrador.—Application has been made to the Canadian parliament for incorporation by this company to build from Cochrane, Ont., northeast, to a point at or near Cape St. Lewis on the Atlantic coast, with a branch to a point at or near the mouth of the Hamilton river, Que., and a branch to the city of Quebec. Smith & Johnston, Ottawa, are solicitors for the applicants.

Canadian Northern Pacific.—A contract has been given to the Northern Construction Company for building an extension of the Lulu Island line from New Westminster, B. C., to Steveston, about 12 miles. (October 18, p. 774.)

Cape Girardeau & Northern.—Incorporated in Missouri with $2,500,000 capital as a consolidation of the Chester, Perryville & St. Genevieve, and other roads formerly in the Hauck system, a total of 106 miles. It is understood that an extension will be built from Farmington, Mo., north to a point in the lead belt, probably to Flat river. J. R. Byrd, St. Louis, is president, R. H. Schultz, general manager. The general offices of the company are at St. Louis.

Central Illinois Public Service Company.—According to press reports, this company, which operates a 14-mile line from Mattoon, Ill., east to Charleston, is planning to build a network of interurban lines, including a line from Mattoon, west via Pana and Taylorville, to Springfield, about 80 miles.

Chester, Perryville & St. Genevieve.—See Cape Girardeau & Northern.

Chicago, Terre Haute & Southeastern.—This company has given a contract to the Crowley-Salisbury Construction Company, Davenport, Ia., to build a branch to coal fields in southern Indiana. The work on the new branch will be mostly rock excavation.

Cincinnati, Louisville, Lexington & Maysville (Traction).—An officer of this company, which started work some time ago on a line from Covington, Ky., south, writes that grading has been finished on 15 miles, and contracts are to be let at once. The plans call for building from Cincinnati, Ohio, to Lexington, Ky., and from Louisville east to Maysville. The maximum grade will be 1¾ per cent., maximum curvature 4 deg. There will be one 500-ft. bridge and another 200 ft. long, also a number of station buildings. W. T. S. Blackburn, president, Dry Ridge, Ky. (May 31, p. 1220.)

Cuyuna Northern.—According to press reports this company will build an 8-mile extension from the Cuyuna Mille Lacs mine

in Minnesota, to a point on the Northern Pacific between Cedar Lake and Aitkin. It is understood that the work is to be started in the near future. (March 15, p. 525.)

EASTERN MIDLAND.—Incorporated in Pennsylvania with $400,000 capital, to build from Matamoras, Pa., southwest to the Delaware Water Gap, about 40 miles. The incorporators include A. D. Thornburg, Aspinwall; H. C. Miller, McKeesport, and H. Hunt, Bellevue.

LAKE ERIE & YOUNGSTOWN (Electric).—This company has increased its capital stock from $300,000 to $4,800,000, and will issue $4,500,000, ten-year 5 per cent. bonds. Construction work on the line from Youngstown, Ohio, north to Conneaut Harbor, about 60 miles on a private right of way has been under way for some time. (May 10, p. 1077.)

NEW YORK ROADS.—Bids are wanted January 28, by the New York Public Service Commission, First district, New York City, for the construction of Section No. 2 of the Woodside, Astoria and Corona Rapid Transit Railroad of New York City. It is to be a two and three-track elevated railroad in Second or Debevoise avenue, beginning 300 ft. south of Beebe avenue and extending to a point about 300 ft. south of Ditmars avenue, with five local stations and one express station.

NORTH EASTERN.—See North Railway.

NORTH RAILWAY.—This company, which was incorporated in Quebec in 1906 as the the North Eastern, is applying for a Canadian charter, and for an extension of time to build from the east shore of Lake Temiskaming near Ville Marie, east, passing the southern bays of lakes Des Quinze, Victoria and Kakebonga to the city of Quebec, and to build extensions as follows—from the main line to Ottawa and from Montreal to Quebec; from Quebec and Montreal to the boundaries of the states of Maine, New Hampshire and Vermont, with power also to build a bridge across, or a tunnel under the St. Lawrence river for railway and other traffic. Pringle & Guthrie, Ottawa, are solicitors for the applicants.

PACIFIC & PEACE RIVER.—This company is applying in Canada for an extension of time to build the authorized line from Bella Coola on Burh channel, B. C., thence via the Bella Coola river to a point at or near Fort Fraser, or from a point at or near Dean channel to Fort Fraser, thence north passing east of Stuart lake to a point at or near Fort St. James and north to Fort McLeod, through the Pine pass to Peace river at or near Dunvegan, about 480 miles. J. A. Ritchie, Ottawa, Ont., may be addressed. (March 22, p. 701.)

RALEIGH, ATLANTIC & WESTERN.—Application has been made for a charter in North Carolina to build a line northwest and southeast from Raleigh, N. C., in all about 52 miles. J. H. Pou, Raleigh, is said to be interested.

SAN ANTONIO & AUSTIN INTERURBAN.—This company, with a capital of $25,000, has asked for charter in Texas, to build from San Antonio, Tex., north via Davenport, New Braunsels, San Marcos, Kyle, Buda and Manchaca to San Antonio, about 85 miles. The incorporators include W. B. Tuttle, vice-president of the San Antonio Traction Company; Frederick Terrell, R. R. Russell, F. C. Gross, San Antonio; W. C. Barber, San Marcos, and G. W. Littlefield, Austin.

SAN ANTONIO, UVALDE & GULF.—This company has increased its capital stock from $230,000 to $280,000. Work will begin at once, it is said, on an extension from a point in Atascosa county, near the Live Oak county line, south through the counties of Atascosa, Live Oak and San Patricio, to Mathis, about 50 miles.

SOUTHERN RAILWAY.—This company will at once start work on extensive improvements on the line between Richmond, Va., and West Point, 39 miles. The line will be relaid with heavy rail, replacing lighter sections. The track will be reballasted, sub-structures strengthened and the entire roadway put in condition to handle heavier traffic. It is expected that the work will be completed within six months.

SUMPTER VALLEY.—According to press reports this company has made two surveys over different routes for an extension from the present southern terminus at Prairie City, Ore., south to Burns in Harney county, about 70 miles.

TOPPENISH, FORT SIMCOE & WESTERN.—According to press reports this company, which was organized some time ago to build from Toppenish, Wash., west, will resume work this spring on the section to White Swan, 20 miles.

TWIN FALLS, OAKLAND & SAN FRANCISCO.—According to press reports this company has been organized to build from Twin Falls, Idaho, south to Wells, Nev., about 100 miles. Dr. T. O. Boyd is president; D. J. Roberts, vice-president and general manager; G. D. Aiken, second vice-president and assistant general manager; A. J. Teadey, secretary, and H. J. Failing, treasurer. The headquarters of the company are at Twin Falls.

WASHINGTON ROADS.—According to press reports the McCoy-Loggie Timber Company, of Bellingham, Wash., will build a logging road up North Fork, about six miles, connecting with the Northern Pacific near Saxon. Work is to be started early this spring. It is expected that the cost of the line will be about $100,000. Eugene Loggie is manager.

WEST TENNESSEE TRACTION.—An officer writes that contracts are to be let soon and the company expects to begin work about April 1, on a line from Memphis, Tenn., northeast via Bartlett, Arlington, Brandon, Mason and Brownsville to Jackson, 86 miles. Financial arrangements are partially completed to build the first section from Memphis to Arlington, 21 miles. This section has been located, the rights of way secured and terminal arrangements made at Memphis. A contract to use the tracks of the Memphis street railway company into Memphis has been entered into. D. P. Bennett, president, D. G. Sargent, vice-president and general manager, Memphis. (December 27, p. 1288.)

## RAILWAY STRUCTURES.

BUFFALO, N. Y.—The New York Public Service Commission, Second district, has ordered the Delaware, Lackawanna & Western to eliminate its crossing of the tracks of the Buffalo Creek, the Pennsylvania Railroad and the New York, Chicago & St. Louis near Smith street, between the Abbott road and the Buffalo river, Buffalo, by elevating the tracks of the D. L. & W. After the approval of the plans by the commission the D. L. & W. is required to complete the work by January, 1914. The expense of the elimination is to be borne by the D. L. & W. except that the sum of $10,000 shall be paid by each of the other three roads. The crossing consists of seven parallel tracks running in a northerly and southerly direction, of which the New York, Chicago & St. Louis owns and operates two, the Pennsylvania Railroad two, and the Buffalo Creek three. Running in an easterly and westerly direction and crossing the above-mentioned seven tracks at grade there are two tracks owned by the D. L. & W.

BUTTE, MONT.—Plans and specifications have been prepared, and bids have been asked for a new passenger station for the Great Northern, which will cost approximately $125,000. The building will have a frontage of 120 ft., and will be 180 ft. long.

CHICAGO, ILL.—The Central Terminal Railway, a subsidiary of the Canadian Pacific, has acquired 13 additional parcels of property in the vicinity of West Fifteenth and South Union streets for its new freight terminal. The company is also purchasing land for auxiliary yards at Harvard street and Forty-eighth avenue. Thus far it has acquired for both sites 252 parcels of land for a total stated price of $2,480,681.

PORTLAND, ORE.—The Spokane, Portland & Seattle is planning to erect an eight story freight terminal building some time during the year.

SAN ANGELO, TEX.—It is expected that work will be started shortly on a new eight-stall roundhouse for the Gulf, Colorado & Santa Fe.

VAN BUREN, ME.—An officer of the International Railway of New Brunswick is quoted as saying that the Maine legislature has passed a bill giving the International a franchise for a railway bridge across the St. Johns river from St. Leonard's, New Brunswick, to Van Buren, Maine. The New Brunswick government has already granted similar rights on the Canadian side, and the bridge will be built during the coming summer. The building of an international bridge at St. Leonard's will give the International direct connection at Van Buren with the Bangor & Aroostook.

# Railway Financial News.

ATLANTIC, NORTHERN & SOUTHERN.—Judge Arthur, in the district court at Atlantic, Iowa, on January 13, ordered the resale of this company and declared forfeited the money paid from time to time by Leslie W. Shaw, of Philadelphia, Pa., on account of the purchase price of $402,000 bid at the time of the sale September, 1912.

BOSTON & LOWELL.—The Massachusetts railroad commission has approved the issue of $1,000,000 twenty-year 4½ per cent. bonds for refunding a like amount, due February 1, 1913.

BROOKLYN RAPID TRANSIT COMPANY.—This company's subsidiary, the New York Municipal Railway Corporation, has applied to the New York Public Service Commission for authority to execute a first mortgage to the Central Trust Company, New York, as trustee, to secure an issue of not exceeding $100,000,000 of 53-year 5 per cent. bonds dated July 1, 1912. The proceeds will be used for new equipment for the construction of subways and for the strengthening and construction of elevated lines.

CHICAGO & NORTH WESTERN.—Kuhn, Loeb & Company, New York, have bought from this company the following securities, have resold the equipment issue and will offer the other blocks in the near future: $5,700,000 equipment trust certificates of 1912 ($10,000,000 authorized); $2,500,000 Des Plaines Valley first mortgage 4½ per cent., due March 1, 1947; and $1,120,000 St. Paul Eastern Grand Trunk first mortgage 4½ per cent. bonds of 1913-January 1, 1947.

CLEVELAND & PITTSBURGH.—The New York Stock Exchange has listed $2,019,100 additional 4 per cent. special guaranteed betterment stock issued to pay for improvements as follows: Right-of-way and track elevation, $303,816; second, etc., track and yards, $219,503; station buildings, $2,587; docks and wharves, $1,240,106; freight cars, $55,936; passenger cars, $192,465; balance on account of 1910 improvements, $4,688.

CLEVELAND SHORT LINE.—The directors have voted to increase the common stock from $3,750,000 to $4,750,000, the proceeds to be used in completing the line under construction. The Lake Shore & Michigan Southern owns all the $3,750,000 common and $3,525,000 preferred stock.

ERIE & CENTRAL.—Stockholders of this company, the stock of which is owned by the Delaware, Lackawanna & Western, have voted to lease the road to the Delaware, Lackawanna & Western for 99 years from July 1, 1913.

HUDSON & MANHATTAN.—Kuhn, Loeb & Company, New York, Robert Fleming & Company, London, and Harvey Fisk & Sons, New York, as readjustment managers, have prepared a plan for the readjustment of the finances of this company. This plan will reduce the fixed charges by over 25 per cent. and will provide for the payment of $21,157,000 Hudson Companies' notes which mature between February 1, 1913, and February 1, 1914. The company has not been earning the interest on its 4½ per cent. first mortgage bonds. Bondholders and stockholders to become parties to the readjustment must deposit their bonds (with February 1, 1913, coupon attached) and their stock or voting trust certificates with the Guaranty Trust Company, New York, or with Robert Fleming & Company, London, on or before February 14, 1913. It is said that between 85 and 90 per cent. of the Hudson & Manhattan bondholders have already signified their willingness to participate in this plan.

LARAMIE, HAHN'S PEAK & PACIFIC.—A bondholders' and noteholders' protective committee has been formed consisting of Alexander J. Hemphill, Henry Sanderson, W. Frederick Snyder and Lawrence Barnum, with the Guaranty Trust Company of New York as depository, and Hornblower, Miller & Potter as counsel, and L. B. Franklin, 28 Nassau street, New York, as secretary. This committee calls for the deposit only of the first refunding mortgage 6 per cent. bonds and the collateral trust 7 per cent. notes. Another committee, consisting of Frank D. Pavey, chairman; Thomas E. Eaton, Robert H. Gault, James W. Green, William B. Randall and Charles H. Thomas, requests deposits of first refunding bonds with the New England Trust Company, Boston, Mass., and the Security Transfer & Register Company, New York.

MINNEAPOLIS, ST. PAUL & SAULT STE. MARIE.—William A. Read & Company, New York, are placing at par and interest new 4½ per cent. equipment notes series E, dated January 1, 1913, and due $159,000 semi-annually from January 1, 1913, to January 1, 1923, both inclusive. The total issue is $3,180,000. The pledged equipment is all new and of large capacity, consisting of 25 locomotives, 49 steel passenger and mail service cars, 1,500 steel frame box cars, 400 steel underframe ballast and flat cars, 300 ore cars and 20 cabooses.

NEW YORK CENTRAL LINES.—J. P. Morgan & Company, the First National Bank, and the National City Bank, all of New York, are offering $12,540,000 4½ per cent. certificates issued under the New York Central Lines equipment trust of 1913. The certificates are offered in series having progressive dates of maturity, from January 1, 1914, to January 1, 1928, at prices to net about 4.65 per cent. The certificates are guaranteed by the New York Central & Hudson River and five of its principal controlled lines. Of this issue $24,000,000 certificates are authorized.

NEW YORK, CHICAGO & ST. LOUIS.—An annual dividend of 4 per cent. has been declared on the $14,000,000 common stock, payable March 1 to holders of record January 31, comparing with 3 per cent. paid in each of the three preceding years.

NEW YORK, NEW HAVEN & HARTFORD.—Morton F. Plant, of New London, Conn., and Lawrence Minot, of Boston, Mass., have been elected directors. They succeed George MacCulloch Miller, who retired on account of age, and Augustus S. May, treasurer of the company, who served temporarily.

NORTHWESTERN PACIFIC.—The control of this company has passed from the Atchison, Topeka & Santa Fe to the Southern Pacific in accordance with the agreement recently made between the two latter companies. The Southern Pacific will have the control for one year at the end of which time the Atchison, Topeka & Santa Fe will again assume control.

PENNSYLVANIA RAILROAD.—This company has acquired the Cambria & Clearfield, which operates about 399 miles in Pennsylvania. The road has been part of the Pennsylvania for some time, the Pennsylvania owning practically all of the capital stock and operating the road under lease.

SCOTT CITY NORTHERN.—Dewey Dunn and W. H. Wagner were appointed receivers on January 11 in proceedings brought by Attorney-General Dawson, of Kansas, on the ground of alleged over-capitalization and insolvency and mismanagement of its officers. The line extends from Scott City to Winona 53 miles, and has a capitalization of $1,325,000 each of stock and bonds.

SOUTHERN PACIFIC OF MEXICO.—The following directors have resigned from the board: F. V. S. Crosby, R. L. Gerry, R. S. Lovett, Alex. Millar and W. V. S. Thorne. Julius Kruttschnitt succeeds R. S. Lovett on the board and is chairman of the executive committee. The other vacancies were filled by the election of L. J. Spence, F. W. Mahl, W. A. Worthington, and W. F. Bull. Alex. Millar also resigned as secretary of the board, the vacancy not being filled.

TENNESSEE CENTRAL.—A protective committee has been formed for the general mortgage 5 per cent. bonds due 1954, consisting of Alexander J. Hemphill (chairman), Graham H. Harris, Breckenridge Jones, Walter T. Rosen, and Albert H. Wiggin, with Lewis B. Franklin, 28 Nassau street, New York, as secretary, and Roberts Walker and Van Vorst, Marshall & Smith as counsel. Deposits are requested to the Guaranty Trust Company of New York. According to press reports Federal Judge E. T. Sanford on January 18 ordered the receivers to issue $330,000 6 per cent. receivers' certificates, the proceeds to be used for new equipment and improvements.

VIRGINIAN.—Stockholders will vote at the annual meeting on February 1 on the question of reducing common stock from $34,850,000 to not less than $31,271,500.

Samuel L. Fuller has been made a director of this company, succeeding Franklin Q. Brown.